Document Title **Revised COMPTEL SIM Mass Model Description**

Document ID **COM-RP-UNH-SIM-047**

Issue No. **2**

Issue Date **25 April 1996**

Prepared by **R. M. Kippen**

Contents

0 Document Issue Notes

Issue 2 (25-April-1996):

The documentation and mass models of issue 1 were found to contain a few errors as listed below. These errors have been corrected in issue 2 and new mass models have been created.

- More accurate description of the reflective paint in the D1 side volume in both the HIres and LOres models.
- Correct height of D1 PMT quartz window (0.5 cm) in HIres mass model.
- Corrected several omissions in the documentation.
- Corrected mass models: UNH-IDT-1017 – UNH-IDT-1020

Issue 1 (15-April-1996):

Original version. Mass models: UNH-IDT-1013 – UNH-IDT-1016

1 Introduction

This document provides a detailed description of the revised COMPTEL mass model as it is encoded in an IDT ("Instrument Definitions Table") dataset. The IDT dataset is a required input for the SIMGAM, SIMENE and SIMTRK tasks of the SIM subsystem of COMPASS. These tasks simulate the response of COMPTEL to incident gamma-rays using the GEANT Monte Carlo simulation package developed and maintained by CERN. An earlier document (COM-RP-UNH-SIM-039) described the mass model as it was defined prior to this report. Upon close inspection, several inconsistencies were found in the earlier mass model (most notably in the mass distribution around the D1 and D2 detector modules). The possible need for a more accurate model of the COMPTEL mass distribution was highlighted by recent studies indicating the importance of secondary particles in the instrument response (see Ref. 10). The revisions described in this report were made in attempt to more closely model the D1/D2 mass distribution, as well as to review *all other* instrument subsystems. New measurements of flight-spare parts and a close examination of related documentation were used as a basis for this revised mass model. The following major changes were performed:

- More detailed model of the mass distribution in the detector housings.
- More realistic model of the detector electronics boxes.
- More accurate model of the mass and geometry of the detector platforms.
- More realistic model of the veto dome assemblies.
- More realistic model of the veto PMT/electronics assemblies.
- More realistic model of the COMPTEL support structure.

The complexity of this new mass model significantly degrades the performance of our simulation software (roughly a factor of two or more slower). For this reason, two versions of the revised mass model have been created. The first is a high-resolution model ("HIres"), which includes all the changes listed above. The second is a low-resolution model ("LOres"), which consists of fewer elements and lacks much of the complexity of the HIres version. The LOres model is thus similar to the current standard mass model. However, the LOres model includes the detailed mass distribution of the detector housings and a more realistic model of the support structure. The simulation software performance using the LOres model is roughly the same (slightly *improved*) as with the current standard mass model. A later report will examine how the HI- and LO-resolution mass models affect the simulated response.

The specific COMPASS IDT datasets created for this report are as follows:

UNH-IDT-1017: LOres model — calibration version (empty regions filled with "air").
UNH-IDT-1018: LOres model — in-flight version (empty regions filled with vacuum).

UNH-IDT-1019: HIres model — calibration version (empty regions filled with "air").
UNH-IDT-1020: HIres model — in-flight version (empty regions filled with vacuum).

Note: *the new IDT datasets listed above will only work with SIMGAM version 16 or higher or SIMENE version 12 or higher.*

2 References

1. *GEANT Detector Description and Simulation Tool*, CERN Application Software Group, Computing and Networks Division, CERN, Geneva, Switzerland (Edition of March, 1994 for GEANT version 3.21)

2. *Monte Carlo Simulation of the COMPTEL Gamma-Ray Telescope*, R.M. Kippen, Master's Thesis, University of New Hampshire, May, 1991.

3. "Log of Available IDT, ISS and ISP Datasets for SIM Processing," COM-RP-UNH-SIM-021 (currently under revision).

4. "Overview of COMPASS Simulation Tasks (SIM Subsystem)," J.G. Stacy, COM-RP-UNH-SIM-038, 18 Feb., 1994.

5. "Description of the COMPTEL SIM Mass Model (IDT Dataset)," J.G. Stacy, COM-RP-UNH-SIM-039, 22 Jun., 1994.

6. "Mass Estimation Above and Between D1 and D2 Detectors," COM-TN-MBB-L31-008, 25 Nov., 1983.

7. "Mass Properties Summary," H. Wolter and M. Kratz, COM-TN-MBB-L31-008, 7 Feb., 1986.

8. "Initial COMPTEL Mass Model," D. Morris, UNH/COMPTEL internal document not numbered, 1987.

9. "Estimated Copper Mass Within The Different COMPTEL Harnesses," E. Grögor, COM-TN-MBB-L34-014, 14 Apr., 1984.

10. "Simulation Status Report," R.M. Kippen, COMPTEL Team Meeting Handout, 27 Feb., 1996, SRON-Utrecht.

3 Description and Structure of the IDT Dataset

The IDT ("Instrument Definitions Table") dataset consists of an encoded physical mass model of the COMPTEL instrument and is a required input dataset to the SIMGAM, SIMTRK, and SIMENE tasks of the SIM subsystem of COMPASS. These tasks simulate the response of the COMPTEL detectors to incident gamma radiation, using the GEANT Monte Carlo simulation code developed and maintained at CERN.

The GEANT software system simulates the passage of elementary particles through matter. In the COMPASS SIM tasks, incident gamma-ray photons are propagated and tracked through a model of the COMPTEL instrument, along with any secondary particles and photons resulting from beam-photon interactions with the material of the instrument model. Energy deposits in sensitive detector volumes are recorded and written, along with associated event parameters, as records to an output event file.

Proper execution of the GEANT program requires that an experimental setup be defined at the time of GEANT initialization. An experimental setup is composed of a structure of geometrical *volumes* specified by the user. Each volume element is characterized by a *shape* identifier (e.g., "TUBE" or "CONE"), whose parameters give the dimensions of the volume. The physical properties of a given volume element are determined by the chemical composition of the homogeneous *material*, prescribed by the user, which uniformly fills that volume. Each volume is *positioned* in a local reference system, with origin and axes defined differently for each shape. A given volume may contain other volumes; "daughter" volumes are explicitly positioned inside a "mother" volume. Each volume is given a *volume number* by the user; multiple copies of the same volume may be defined and placed inside the same or different mother volumes, as long as each copy is assigned a unique *copy number*. The material contents of each copy of a given volume are identical. *Tracking medium* parameters are also assigned to each volume; these include such information as the material identifier, a flag indicating whether a particular volume should be considered a sensitive detector element, etc. Finally, certain additional *attributes* may be assigned to each volume; these are used primarily in the GEANT drawing routines, to aid in producing viewable figures of the experimental setup (such as those presented later in this document).

The ensemble of all user-specified volumes for an experimental setup defines a physical or geometry *tree*, usually made up of several *levels*. Note that the properties of a daughter volume positioned within a mother volume at a certain level in the tree replace those of the mother within the region of space occupied by the daughter. A volume is therefore fully defined not just by its own intrinsic characteristics, but also by those of all its *descendants*. A geometry tree can be defined with a maximum of 15 levels in the GEANT program. Furthermore, overlapping volumes may be specified. In this case, the user must specify which volumes take precedence over the others. A five-level tree (four-level for the LOres version) is sufficient to define the COMPTEL/SIM models described here.

The figures and tables presented in this document were produced by non-COMPASS programs linked to the GEANT libraries. Note that two IDT datasets exist in the COMPASS ORACLE database for each model version: one for use in simulating the "in-flight" response of the instrument, and one for use in simulating pre-launch "calibration" measurements. The only difference between the two is that, for the in-flight case, the master "dummy" volumes are filled with vacuum, and for calibration simulations the dummy volumes are filled with air.

4 Description of HIres Mass Model Components

In this section, details of the geometry and composition of each component or "volume" of the HIres COMPTEL SIM mass model are described. The relation between individual volumes is given in the "Geometry Tree" and can be seen in the corresponding figures. Further details of the positioning and material composition of each volume are given in the tables of the succeeding sections. Note that a significant amount of approximation and simplification was required in building the COMPTEL mass model. Individual volumes in the mass model often contain an amalgamation of several parts in the real instrument. Therefore, a list of the real parts (and their approximate mass and composition) is included in each of the mass model volumes is given.

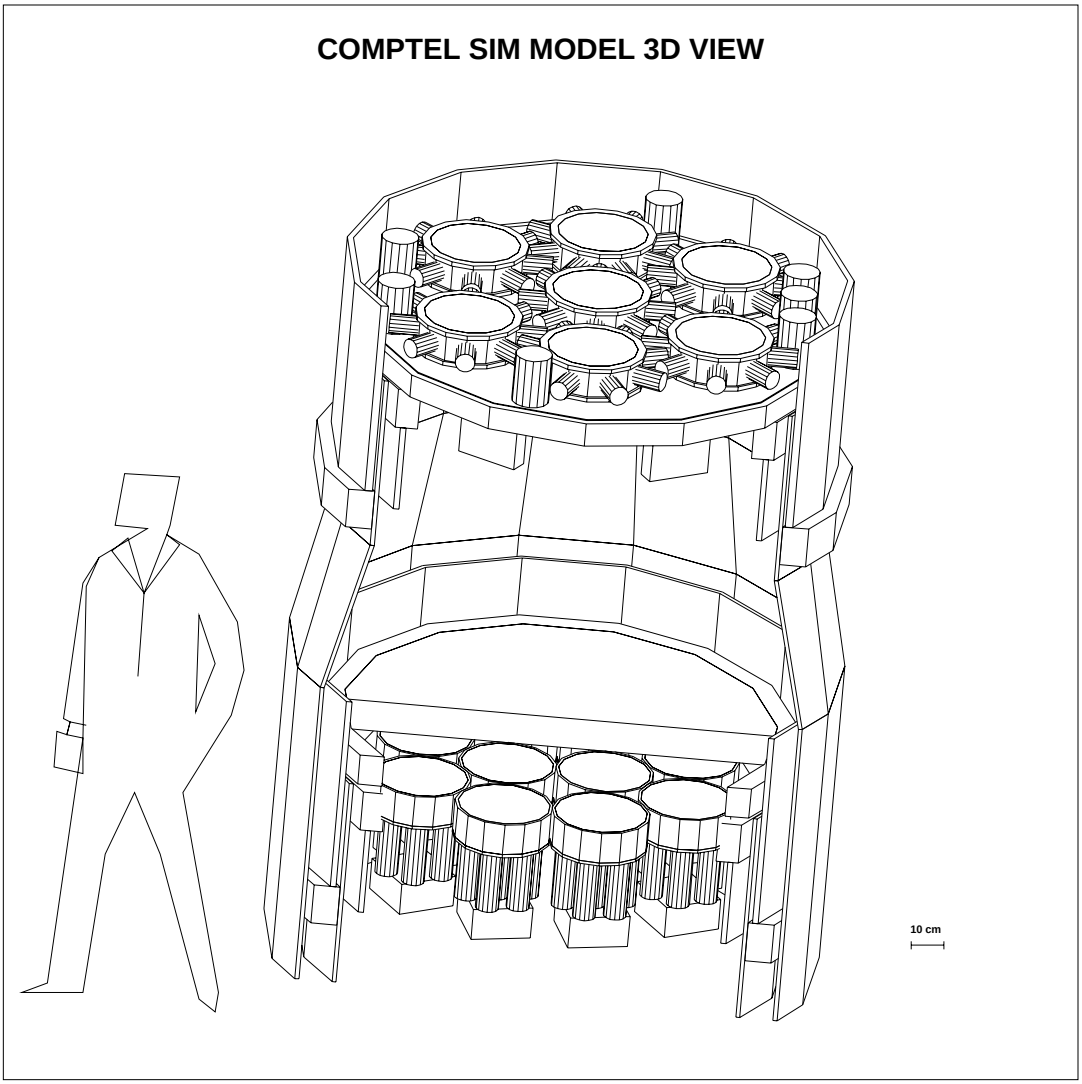

Fig. 4.1. Three dimensional view of the full SIM HIres model (excluding veto dome tops). Note that the polygonal appearance of some volumes is an artifact of the drawing routines. Such volumes in the real model are true cylinders, cones, etc.

4.1 Overview: The Full Geometry Tree

The following diagram illustrates the structure of the geometry tree used by GEANT in tracking photons and particles through the COMPTEL SIM mass model and the "nesting" of the volumes defined within the IDT dataset. Each node represents a single volume definition, with its descendants branching from left-to-right. Nodes containing ✯# indicate that multiple copies of this volume exist and nodes containing overlapping boxes indicate that this volume is allowed to overlap with others. The geometry and materials associated with each of these volumes are described in the following sections.

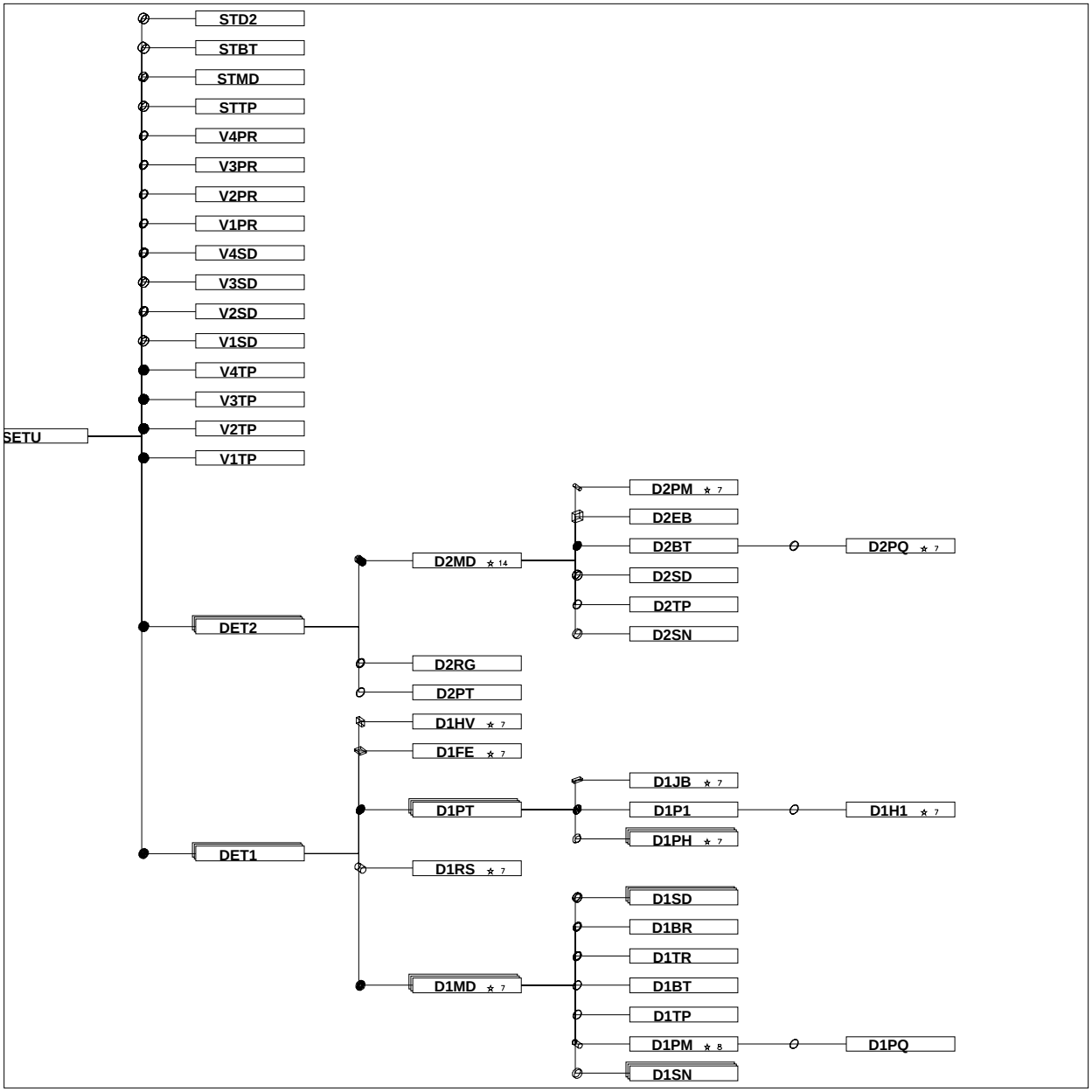

Fig. 4.2. COMPTEL SIM HIres model geometry tree.

COMPTEL SIM MODEL X-Z VIEW

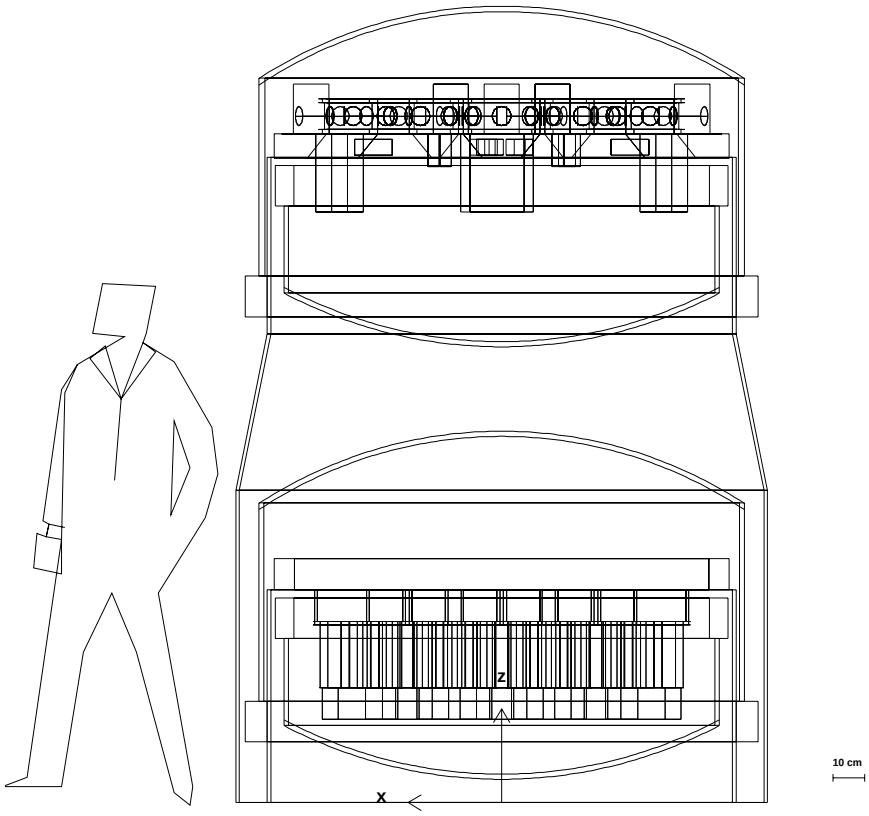

Fig. 4.3. Side view of the full SIM HIres model.

4.2 The D1 Subsystem

The simulation mass model of the D1 subsystem consists of three major parts: 1) the 7 D1 detector modules, 2) the 7 liquid scintillator reservoirs and 3) the platform, cables and electronics beneath the detector modules. Each of these parts has been modeled with the simple geometric volumes available in GEANT as described below.

DET1

This "dummy" volume is filled with either vacuum or "air" and serves as the mother volume for all other D1 components.

```
Shape:   TUBE     Dimensions: r = 73.00 cm, h = 84.05 cm
Daughter volumes: 7*D1MD, 7*D1RS, D1P1, D1P2, 7*D1FE
Total mass of daughters: 136.800 kg
```

D1RS

A cylinder which roughly approximates the components of D1 module reservoir. Mass estimates are derived from measurements of flight-spare parts. The following real parts are included in the mass and material composition estimates:

```
1) Reservoir assembly (stainless steel): (Fe: 1362.690 g, Cr: 389.340 g, Ni:
   194.670 g)
2) NE213A scintillator fluid: (C: 386.528 g, H: 41.715 g)
Shape: TUBE    Dimensions: r = 5.650 cm, h = 15.800 cm
Volume: 1584.542 cc  Density: 1.499 g/cc  Mass: 2374.943 g
Composition: Fe: 57.378%  C: 16.275%  H: 1.756%  Cr: 16.394%  Ni: 8.197%
```

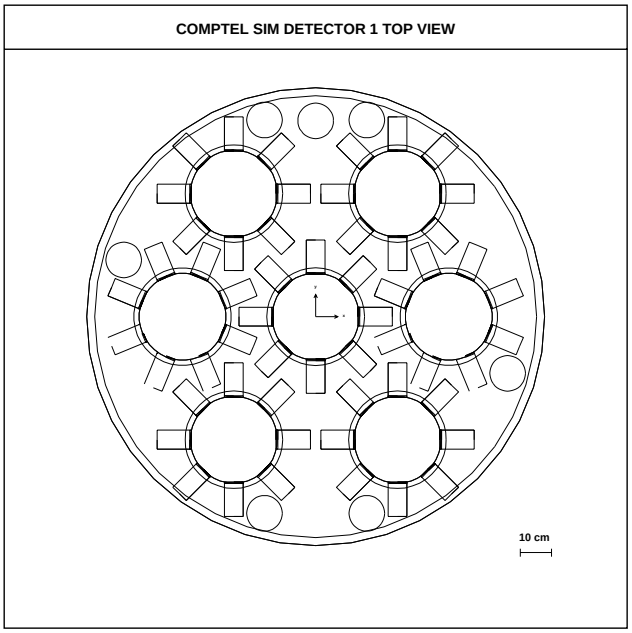

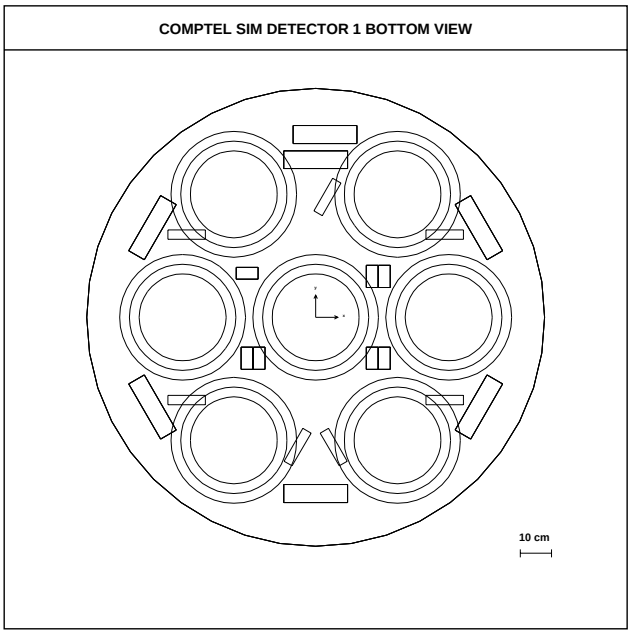

Fig. 4.4. Top and bottom views of the HIres D1 subsystem model.

4.2.1 D1 Modules

Each D1 detector module is contained inside a cylindrical dummy mother volume (D1MD), which is copied 7 times and positioned/rotated at the proper location above the D1 platform. A single module consists of the liquid scintillator (D1SN), top, bottom and side housings (D1TP, D1BT, D1SD) and 8 PMT assemblies. The housings have been further enhanced by adding a ring along the top and bottom edges of the modules to account for the increased density of aluminum and stainless steel found there.

D1MD

This "dummy" volume is filled with either vacuum or "air" and serves as the mother volume for all components of a single D1 module (excluding reservoirs). Seven copies of this volume (with the proper rotation) are used to model the seven D1 detector modules.

Shape: TUBE Dimensions: r = 24.600 cm, h = 11.200 cm

Volume: 21293.062 cc

Daughter volumes: D1SN, 8*D1PM, D1TP, D1TR, D1SD, D1BT, D1BR

Total mass of daughters: 12455.744 g

Total (including D1RS): 14830.687 g

D1SN

A cylinder which contains the NE213A liquid scintillator of a single D1 module. The composition of NE213A is taken from the manufacturers specifications (Nuclear Enterprises, Inc.).

Shape: TUBE Dimensions: r = 13.800 cm, h = 8.500 cm

Volume: 5047.78 cc Density: 0.889 g/cc Mass: 4487.476 g

Composition: $H_{1.286}C_{1.0}$

D1TP

A cylinder which approximates the components of the top cover of a D1 module. The density was chosen so as to match that reported in COM-TN-MBB-L31-008 ("Mass Estimation Above and Between D1 and D2 Detectors"). The following real parts are included in the mass and material composition estimates:

1) Aluminum honeycomb: 0.092 g/cm^2

2) Aluminum face sheets: 0.224 g/cm^2

3) Adhesive film: 0.030 g/cm2 (roughly CH_2)

4) White paint (NE 562): 0.050 g/cm2 (54% TiO_2, 46% Sodium Silicate = Na_2SiO_3)

Shape: TUBE Dimensions: r = 13.800 cm, h = 1.350 cm

Volume: 807.685 cc Density: 0.293 g/cc Mass: 236.921 g

Composition: Al: 79.798% C: 6.515% O: 4.992% Ti: 4.091% Na: 2.207%
Si: 1.336% H: 1.061%

D1TR

A cylindrical ring which approximates the mass distribution along the outside edge of the top cover of a D1 module. Mass estimates were derived from measurements of flight spare parts. The following real parts are included in the mass and material composition estimates:

1) Al from top cover not included in D1TP: 397.742 g
2) Part of Al from housing sidewall: 450.000 g
3) Metal cover seal (roughly Al): 38.130 g
4) Viton cover seal (roughly CH_2): 4.200 g
5) 32 cover screws (stainless steel 70%Fe 20%Cr 10%Ni): 55.040 g

Shape: TUBE Dimensions: *r1* = 13.800 cm, *r2* = 16.400 cm, *h* = 1.350 cm
Volume: 333.015 cc Density: 2.838 g/cc Mass: 945.112 g
Composition: Al: 93.732% Fe: 4.077% Cr: 1.165% Ni: 0.582% C: 0.444%

D1BT

A cylinder which approximates the components of the bottom cover of a D1 module. The density was chosen so as to match that reported in COM-TN-MBB-L31-008 ("Mass Estimation Above and Between D1 and D2 Detectors"). The following real parts are included in the mass and material composition estimates:

1) Aluminum honeycomb: 0.092 g/cm^2
2) Aluminum face sheets: 0.224 g/cm^2
3) Adhesive film: 0.030 g/cm^2 (roughly CH_2)
4) White paint (NE 562): 0.050 g/cm^2 (54% TiO_2, 46% Sodium Silicate = Na_2SiO_3)
5) Magnetic shield: 0.086 g/cm^2 (Mu metal 75% Ni, 25% Fe)

Shape: TUBE Dimensions: *r* = 13.800 cm, *h* = 1.350 cm
Volume: 807.656 cc Density: 0.357 g/cc Mass: 288.373 g
Composition: Al: 65.560% Ni: 13.382% C: 5.353% Fe: 4.461% O: 4.102%
Ti: 3.361% Na: 1.813% Si: 1.098% H: 0.870%

D1BR

A cylindrical ring which approximates the mass distribution along the outside edge of the bottom cover of a D1 module. Mass estimates were derived from measurements of flight spare parts. The following real parts are included in the mass and material composition estimates:

1) Al from bottom cover not included in D1TP: 392.242 g
2) Part of Al from housing sidewall: 450.000 g
3) Metal cover seal (roughly Al): 38.130 g
4) Viton cover seal (roughly CH_2): 4.200 g
5) 32 cover screws (stainless steel 70%Fe 20%Cr 10%Ni): 55.040 g

Shape: TUBE Dimensions: *r1* = 13.800 cm, *r2* = 16.400 cm, *h* = 1.350 cm
Volume: 333.015 cc Density: 2.822 g/cc Mass: 939.612 g
Composition: Al: 93.695% Fe: 4.100% Cr: 1.172% Ni: 0.586% C: 0.447%

D1SD

A hollow cylinder which approximates the mass distribution along the sidewall of a D1 module. Note that part of this volume (386.648 cm^3) is occupied by the 8 D1 PMT volumes. Mass estimates were derived from measurements of flight spare parts. The following real parts are included in the mass and material composition estimates:

1) Al sidewall not included in D1TR & D1BR: 1076.340 g
2) 8 Al PMT window flanges: 698.240 g
3) 8 Teflon/Al window seals (80% Al 20% Plastic): 20.080 g
4) 16 Viton & Kel-F seals (Plastic): 31.440 g
5) 80 stainless steel screws (70%Fe 20%Cr 10%Ni): 137.600 g
6) Part of D1 harness: 120.923 g
7) White paint (NE 562): 16.644 gm (54% TiO_2, 46% Sodium Silicate = Na_2SiO_3)
8) Quartz (SiO_2) not included in D1PM: 150.639 g

Shape: TUBE Dimensions: *r1* = 13.800 cm, *r2* = 15.500 cm, *h* = 8.500 cm
Volume: 943.455 cc Density: 2.387 g/cc Mass: 2251.906 g
Composition: H: 0.441% C: 3.495% O: 4.625% Na: 0.239% Al: 79.517%
Si: 3.222% Ti: 0.129% Cr: 1.222% Fe: 4.277% Ni: 0.611%
Cu: 2.222%

D1PM

A cylinder which includes all of the parts of a D1 PMT assembly. Mass estimates were derived from measurements of flight spare parts and are described in more detail in COM-RP-MPE-SIM-001. Most of the quartz window is included in a separate daughter volume (D1PQ). Eight copies of this volume are rotated and positioned in each D1MD volume.

Shape: TUBE Dimensions: *r1* = 3.000 cm, *h* = 10.930 cm
Volume: 309.038 cc Density: 1.297 g/cc Mass: 382.573 g
Composition: H: 0.452% Be: 0.830% C: 5.445% N: 0.758% O: 11.610%
Al: 31.061% Si: 9.443% Cl: 4.524% K: 0.409% Cr: 0.314%
Fe: 3.795% Ni: 11.383% Cu: 14.421% Zn: 1.372% Sn: 2.092%
Pb: 2.091%
Daughter volume:D1PQ (30.720 g quartz)
Total mass (including daughter): 413.293 g

D1PQ

A cylinder which includes most of the quartz window mass of a D1 PMT. It is positioned inside the D1PM volume. The remaining quartz mass is incorporated in the D1SD volume.

Shape: TUBE Dimensions: *r1* = 3.000 cm, *h* = 0.500 cm
Volume: 14.137 cc Density: 2.173 g/cc Mass: 30.720 g
Composition: SiO_2

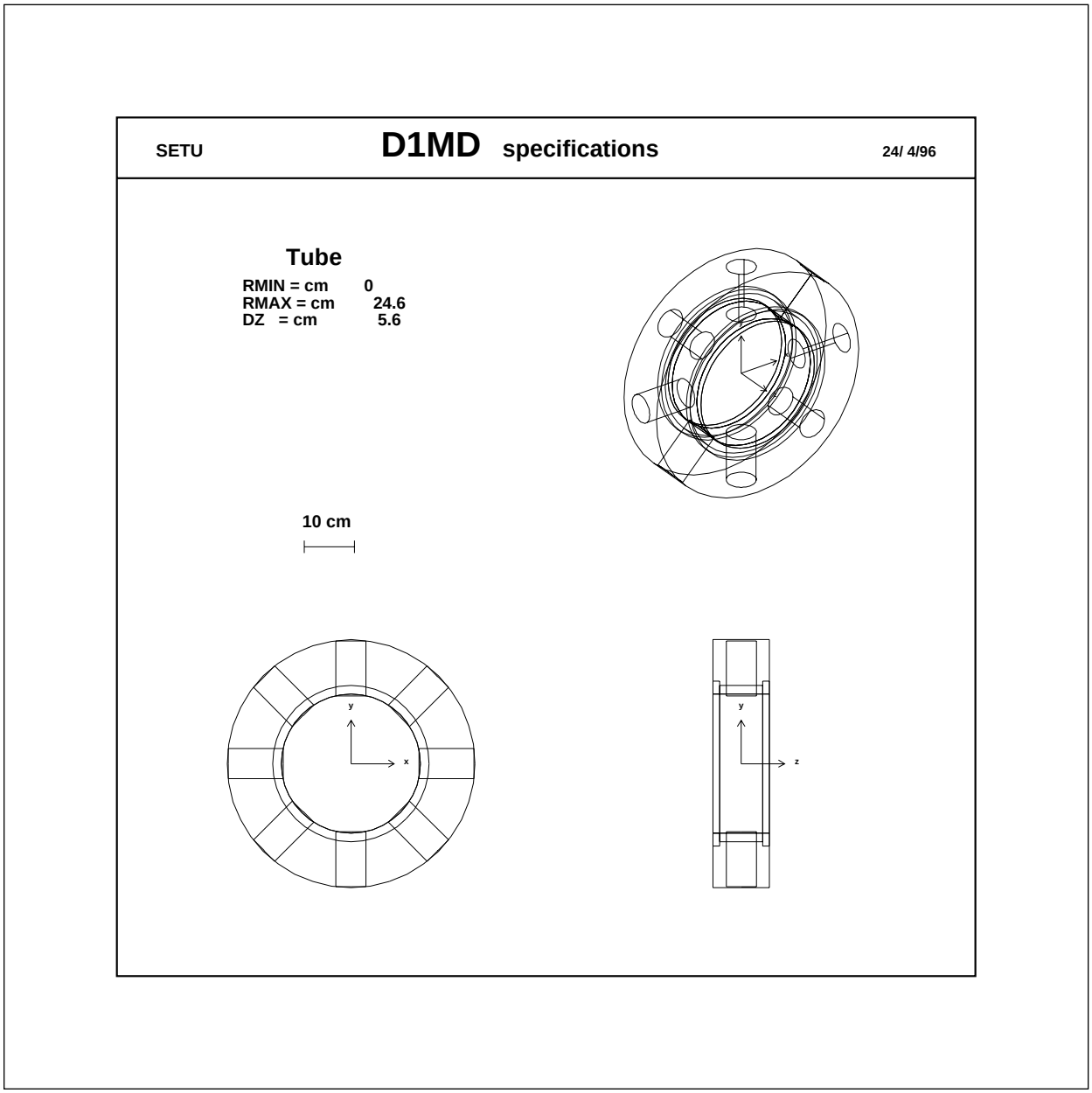

Fig. 4.5. Views of the HIres D1 module model.

4.2.2 D1 Platform Assembly

The D1 platform has been modeled with a series of two cylindrical plates located beneath the D1 modules. The upper plate (D1P1) is thin and made of pure aluminum, with cylindrical holes beneath each of the detector volumes. The lower plate (D1PT) is thicker and is made of a mixture of aluminum, copper and generic electronics, with conical holes below each detector volume. Finally, the electronics boxes (D1FE, D1JB, D1HV) are placed inside (and sometimes overlapping with) the lower plate. Mass estimates are based on direct measurement and on those given in the "D1 Subsystem Internal Review" (May, 1984). The following real parts are included in the mass and material composition estimates for the various volumes:

D1P1:

1) Partial mass of D1 platform assembly (Al): 10.076 kg of 21.2 kg
2) Holes (D1PH) under each of the 7 modules (vacuum or "air")
Shape: TUBE Dimensions: r = 72.750 cm, h = 0.300 cm
Volume: 3731.724 cc Density: 2.700 g/cc Mass: 10.076 kg
Daughter volumes: 7*D1H1
Composition: Al: 100%

D1FE:

1) D1 FEE electronics box (G.E.): 2072.0 g
Shape: BOX Dimensions: x = 20.300 cm, y = 5.700 cm, z = 24.800 cm
Volume: 2869.608 cc Density: 0.722 g/cc Mass: 2072.00 g
Composition: Al: 50% Cu: 15% Si: 10% O: 10% Fe: 5% Sn: 5% Pb: 5%

D1JB:

1) D1 HVJB electronics box (G.E.): 243.0 g
Shape: BOX Dimensions: x = 12.000 cm, y = 3.000 cm, z = 5.125 cm
Volume: 184.5 cc Density: 1.317 g/cc Mass: 243.00 g
Composition: Al: 50% Cu: 15% Si: 10% O: 10% Fe: 5% Sn: 5% Pb: 5%

D1HV:

1) D1 HVPS electronics box (G.E.): 385.0 g
Shape: BOX Dimensions: x = 3.700 cm, y = 7.000 cm, z = 10.25 cm
Volume: 265.475 cc Density: 1.450 g/cc Mass: 385.00 g
Composition: Al: 50% Cu: 15% Si: 10% O: 10% Fe: 5% Sn: 5% Pb: 5%

D1PT:

```
1) Partial mass of D1 platform assembly (Al): 11.124 kg of 21.2 kg
2) Holes (D1PH) under each of the 7 modules (vacuum)
3) Copper harness not included in modules: 2.150 kg
4) D1 harness (excluding copper): (C: 2.573 kg, H: 0.43 kg)
5) Misc. small parts (Al): 2.50 kg
6) Shield and filter boxes (G.E.): 4.132 kg
Shape: TUBE    Dimensions: r = 72.750 cm, h = 7.600 cm
Volume: 69424.600 cc Density: 0.330 g/cc  Mass: 22.909 kg
Daughter volumes: 7*D1H2, 7*D1JB
Overlapping volumes: 7*D1FE, 7*D1HV
Composition: H: 1.877%  C: 11.231%  O: 1.803%  Al: 68.483%  Si: 1.803%
             Fe: 0.904%  Cu: 12.091%  Sn: 0.904%  Pb: 0.904%
```

D1PH:

```
Shape: CONE    Dimensions: r1 = 13.8 cm, r2 = 20.0 cm h = 7.600 cm
Volume: 6895.737 cc  Density: 0.000 g/cc  Mass: 0.000 kg
Composition: Vacuum or "air": 100%
```

4.3 The Anticoincidence Subsystem

The four anticoincidence shields in COMPTEL (veto domes) each consist of two basic components: the domes, themselves (including the plastic scintillator, hard covers, etc.) and the PMTs, electronics, etc. which lie in a ring around the open end of the domes. In modeling the domes, these two components have been divided into three volumes: 1) the curved surface of the domes have been approximated using a spherical shell (DxTP), 2) the remaining part of the domes have been approximated by a cylindrical shell (VxSD) and 3) the PMTs and electronics have been combined into a cylindrical ring (VxPR). The top shell thickness was chosen so as to match that reported in COM-TN-MBB-L31-008 ("Mass Estimation Above and Between D1 and D2 Detectors"). Remaining data for the mass and density come from the GRO mass model (COM-TN-UNH-F70-050).

Total Model Veto Mass:

```
V1TP+V1SD+V1PR = 128.330 kg
V2TP+V2SD+V2PR =  71.830 kg
V3TP+V3SD+V3PR = 112.090 kg
V4TP+V4SD+V4PR =  71.830 kg

Total mass of all veto assemblies: 384.080 kg
```

V1TP & V1SD:

The following real parts are included in the mass and material composition estimates of the V1 top and side domes (see COMPTEL Critical Design Review, July, 1984):

1) Plastic scintillator (NE110 $CH_{1.102}$): 73.140 kg
2) Hard Covers (Kevlar ~ CH_2): 12.400 kg
3) Part of thermal hardware ($C_{28}H_{14}O_7$): 6.20 kg
4) Micro Meteorite Shield (assume above composition): 10.000 kg

Total mass: 101.74 kg Density: 1.07 g/cc Volume: 95014.112 cc

Composition: C: 89.80% H: 8.50% O: 1.70%

Top:

Mass/Area :== 1.853 g/cm^2

Shape: SPHE Dimensions: $r1$ = 140.168 cm, $r2$ = 141.900 cm θ_{max} = 33.176°

Sides:

Shape: TUBE Dimensions: $r1$ = 75.694 cm, $r2$ = 77.650 cm h = 63.464 cm

V2/V4TP & V2/V4SD:

The following real parts are included in the mass and material composition estimates of the V2/V4 top and side domes (see COMPTEL Critical Design Review, July, 1984):

1) Plastic scintillator (NE110 $CH_{1.102}$): 41.00 kg
2) Hard Covers (Kevlar ~ CH_2): 6.00 kg

Total mass: 47.00 kg Density: 1.07 g/cc Volume: 43925.234 cc

Composition: C: 90.60% H: 9.40%

Top:

Mass/Area :== 1.776 g/cm^2

Shape: SPHE Dimensions: $r1$ = 147.940 cm, $r2$ = 149.600 cm θ_{max} = 27.726°

Sides:

Shape: TUBE Dimensions: $r1$ = 68.158 cm, $r2$ = 69.600 cm h = 27.923 cm

V3TP & V3SD:

The following real parts are included in the mass and material composition estimates of the V2/V4 top and side domes (see COMPTEL Critical Design Review, July, 1984):

1) Plastic scintillator (NE110 $CH_{1.102}$): 73.10 kg
2) Hard Covers (Kevlar ~ CH_2): 12.40 kg

Total mass: 85.50 kg Density: 1.07 g/cc Volume: 79906.542 cc

Composition: C: 91.10% H: 8.90%

Top:

Mass/Area :== 1.776 g/cm^2

Shape: SPHE Dimensions: $r1$ = 140.240 cm, $r2$ = 141.900 cm θ_{max} = 33.176°

Sides:

Shape: TUBE Dimensions: $r1$ = 76.148 cm, $r2$ = 77.650 cm h = 63.464 cm

V1PR & V3PR:

The following real parts are included in the mass and material composition estimates of the V1/V3 veto PMT assemblies (see AC Subsystem Internal Review, May, 1984):

1) Holding rings (Al): 7.41 kg
2) VIB assembly (Al): 1.09 kg
3) Mounting hardware (Al): 1.08 kg
4) Harness support hardware (Al): 1.00 kg
5) 24 PMT/BLS assemblies (G.E.): 6.75 kg
6) HVPS/HVJB/FEE electronics (G.E.): 3.47 kg
7) Polyurethane: (C: 0.882 kg, H: 0.170 kg, O: 0.848 kg)
8) Harness: (Cu: 1.625 kg, C: 1.982 kg, H: 0.323 kg)

Shape: TUBE Dimensions: $r1$ = 75.000 cm, $r2$ = 82.000 cm, h = 13.000 cm

Volume: 44883.934 cc Density: 0.592 g/cc Mass: 26.590 kg

Composition: H: 1.854% C: 10.771% O: 7.033% Al: 58.857% Si: 3.844%
Fe: 1.922% Cu: 11.875% Sn: 1.922% Pb: 1.922%

V2PR & V4PR:

The following real parts are included in the mass and material composition estimates of the V2/V4 veto PMT assemblies (see AC Subsystem Internal Review, May, 1984):

```
1) Holding rings (Al): 6.79 kg
2) VIB assembly (Al): 0.88 kg
3) Mounting hardware (Al): 0.210 kg
4) Harness support hardware (Al): 1.00 kg
5) 24 PMT/BLS assemblies (G.E.): 6.75 kg
6) HVPS/HVJB/FEE electronics (G.E.): 3.47 kg
7) Polyurethane: (C: 0.836 kg, H: 0.161 kg, O: 0.804 kg)
8) Harness: (Cu: 0.280 kg, C: 0.341 kg, H: 0.056 kg)
Shape: TUBE    Dimensions: r1 = 66.500 cm, r2 = 72.500 cm, h = 13.000 cm
Volume: 34061.148 cc Density: 0.729 g/cc  Mass: 24.830 kg
Composition: H: 1.949%  C: 11.349%  O: 7.354%  Al: 56.340%  Si: 4.116%
             Fe: 2.058%  Cu: 12.718%  Sn: 2.058%  Pb: 2.058%
```

4.4 The D2 Subsystem

The simulation mass model of the D2 subsystem consists of two major parts: 1) the 14 D2 detector modules and 2) the platform, cables and hardware above the detector modules. Each of these parts has been modeled with the simple geometric volumes available in GEANT as described below.

DET2:

This “dummy” volume is filled with either vacuum or “air” and serves as the mother volume for all other D2 components.

```
Shape:   TUBE     Dimensions: r = 72.75 cm, h = 70.70 cm
Daughter volumes: 14*D2MD, D2PT, D2PR
Total mass of daughters: 446.000 kg
```

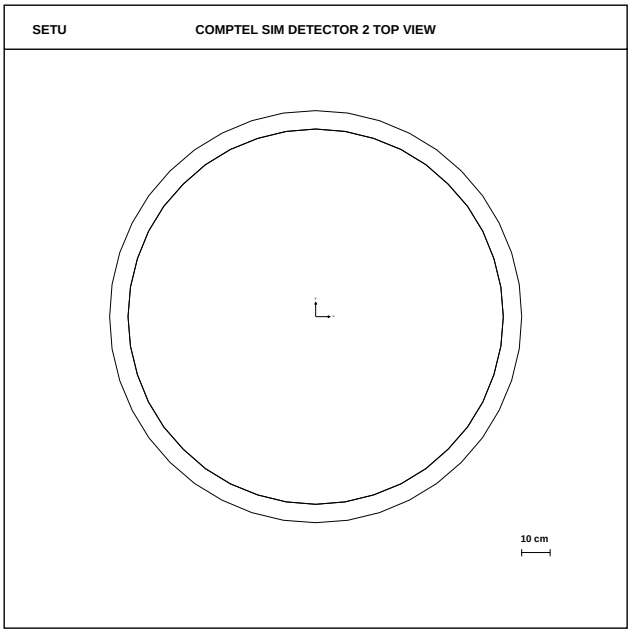

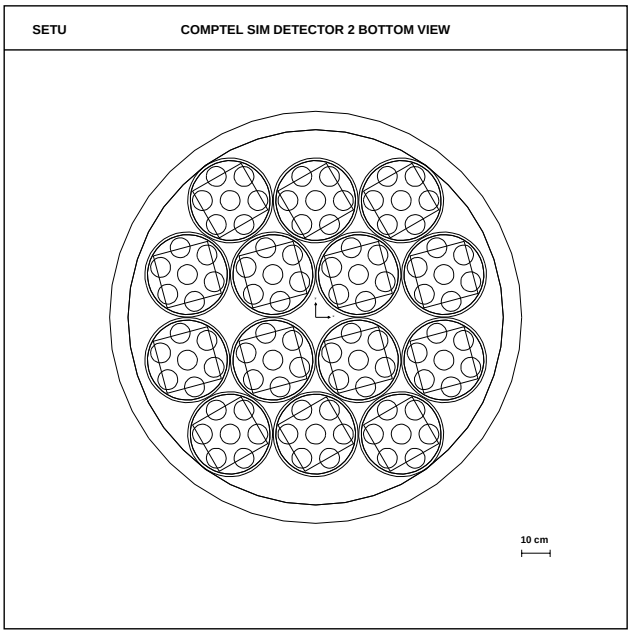

Fig. 4.6. Top and bottom views of the HIres D2 subsystem model.

4.4.1 D2 Modules

Each D2 detector module is contained inside a cylindrical dummy mother volume (D2MD), which is copied 14 times and positioned/rotated at the proper location below the D2 platform. A single module consists of the crystal scintillator (D2SN), top, bottom and side housings (D2TP, D2SD, D2BT), 7 PMT assemblies and an electronics assembly located below the PMTs. Mass estimates are based on direct measurements, the "Mass Properties Summary" (COM-TN-MBB-L31-008) and the "D2 Subsystem Internal Review" (May, 1984).

D2MD:

This "dummy" volume is filled with either vacuum or "air" and serves as the mother volume for all components of a single D2 module. Fourteen copies of this volume (with the proper rotation) are used to model the 14 D2 detector modules.

Shape: TUBE Dimensions: r = 15.000 cm, h = 41.500 cm

Volume: 29334.621 cc

Daughter volumes: D2SN, D2TP, D2SD, D2BT, 7*D2PM, D2EB

Total mass of daughters: 28.660 kg

D2SN:

A cylinder which contains the NaI crystal scintillator of a single D2 module. The composition of NaI is taken from the manufacturers specifications.

Shape: TUBE Dimensions: r = 14.085 cm, h = 7.525 cm

Volume: 4689.970 cc Density: 3.670 g/cc Mass: 17212.190 g

Composition: $Na_{1.0}I_{1.0}$

D2TP:

A cylinder which approximates the components of the top cover of a D2 module. The density was chosen so as to match that reported in COM-TN-MBB-L31-008 ("Mass Estimation Above and Between D1 and D2 Detectors"). The following real parts are included in the mass and material composition estimates:

1) Aluminum honeycomb: 0.063 g/cm^2

2) Aluminum face sheets: 0.056 g/cm^2

3) Adhesive film: 0.020 g/cm^2 (roughly CH_2)

4) Magnetic shield: 0.086 g/cm^2 (Mu metal 75% Ni, 25% Fe)

5) Crystal packing: 0.408 g/cm^2 (RTV615 8% H, 35% C, 29% O, 28% Si)

Shape: TUBE Dimensions: r = 14.085 cm, h = 2.65 cm

Volume: 1651.617 cc Density: 0.239 g/cc Mass: 394.518 g

Composition: H: 5.599% C: 25.276% O: 18.629% Al: 18.799% Si: 18.047%
Fe: 3.397% Ni: 10.190%

D2SD:

A hollow cylinder which approximates the mass along the sides of a D2 module. Masses were estimated from direct measurements and from the masses given in the "D2 Subsystem Internal Review". The following real parts are included in the mass and material composition estimates:

```
1) Aluminum housing: 561.000 g
2) Crystal packing: 216.363 g (RTV615 8% H, 35% C, 29% O, 28% Si)
Shape: TUBE    Dimensions: r1 = 14.085 cm, r2 = 15.000 cm, h = 10.175 cm
Volume: 850.696 cc   Density: 0.914 g/cc  Mass: 777.363 g
Composition: H: 2.227%  C: 9.602%  O: 8.183%  Al: 72.767%  Si: 7.821%
```

D2BT:

A cylinder which approximates the mass along the bottom of a D2 module. It contains the 8 quartz PMT windows as daughter volumes. Masses were estimated from the dimensions and from the masses given in the "D2 Subsystem Internal Review". The following real parts are included in the mass and material composition estimates:

```
1) Aluminum housing: 798.989 g
2) Crystal packing: 144.375 g (RTV615 8% H, 35% C, 29% O, 28% Si)
Shape: TUBE    Dimensions: r = 15.000 cm, h = 1.000 cm
Volume: 437.466 cc   Density: 2.156 g/cc  Mass: 943.364 g
Composition: H: 1.224%  C: 5.174%  O: 4.499%  Al: 84.696%  Si: 4.407%
Daughter volumes: 7*D2PQ (7*83.627 g quartz)
Total mass (including daughters): 1528.752 g
```

D2PM

A cylinder which includes all of the parts of a D2 PMT assembly plus the misc. mass of the PMT holding rings, etc. Mass estimates were derived from the "D2 Subsystem Internal Review" and measurements of flight spare parts. Composition is taken from the D1PM estimates. Seven copies of this volume are positioned in each D2MD volume.

```
Shape: TUBE    Dimensions: r = 3.500 cm, h = 20.125 cm
Volume: 774.501 cc   Density: 1.119 g/cc  Mass: 866.740 g
Composition: H: 0.452%  Be: 0.830%  C: 5.445%  N: 0.758%  O: 11.610%
             Al: 31.061%  Si: 9.443%  Cl: 4.524%  K: 0.409%  Cr: 0.314%
             Fe: 3.795%  Ni: 11.383%  Cu: 14.421%  Zn: 1.372%  Sn: 2.092%
             Pb: 2.091%
```

D2PQ

A cylinder which includes all of the quartz window mass of a D2 PMT. It is positioned inside the D2BT volume.

Shape: TUBE Dimensions: *r1* = 3.500 cm, *h* = 1.000 cm

Volume: 38.485 cc Density: 2.173 g/cc Mass: 83.627 g

Composition: SiO_2

D2EB

A box which includes masses of the electronics of a D2 module (FEE, HVJB, HVPS). Mass estimates were derived from the "D2 Subsystem Internal Review."

1) FEE, HVPS, HVJB (G.E.): 2.220 kg

2) Part of D2 wire harness: 0.460 g (Cu: 40%, C: 53%, H: 7%)

Shape: BOX Dimensions: *x* = 19.600 cm, *y* = 19.000 cm, *z* = 10.200 cm

Volume: 3798.480 cc Density: 0.706 g/cc Mass: 2.680 kg

Composition: H: 1.133% C: 9.166% O: 8.284% Al: 41.416% Si: 8.284%
Fe: 4.142% Cu: 19.291% Sn: 4.142% Pb: 4.142%

4.4.2 D2 Platform Assembly

The D2 platform has been modeled with a cylindrical plate (D2PT) located above the D2 modules and a cylindrical ring (D2RG) around the plate. The density of the plate was chosen so as to match that reported in COM-TN-MBB-L31-008 ("Mass Estimation Above and Between D1 and D2 Detectors"). The remaining mass of the D2 platform assembly as well as the D2 wiring harness is attributed to D2RG. The following real parts are included in the mass and material composition estimates for the various volumes:

Total D2 Platform Assembly Mass:

D2PT+D2RG = 44.760 kg

D2PT:

1) Aluminum honeycomb: 0.314 g/cm^2 = 4.330 kg

2) Aluminum face sheets: 0.560 g/cm^2 = 7.722 kg

3) Adhesive film (~CH_2): 0.03 g/cm^2 = 413.659 g

4) Black paint (approximated with aluminum): 0.012 g/cm^2 = 165.464 g

Shape: TUBE Dimensions: *r* = 66.25 cm, *h* = 10.000 cm

Volume: 137886.465 cc Density: 0.09160 g/cc Mass: 12.631 kg

Composition: H: 0.458% C: 2.816% Al: 96.726%

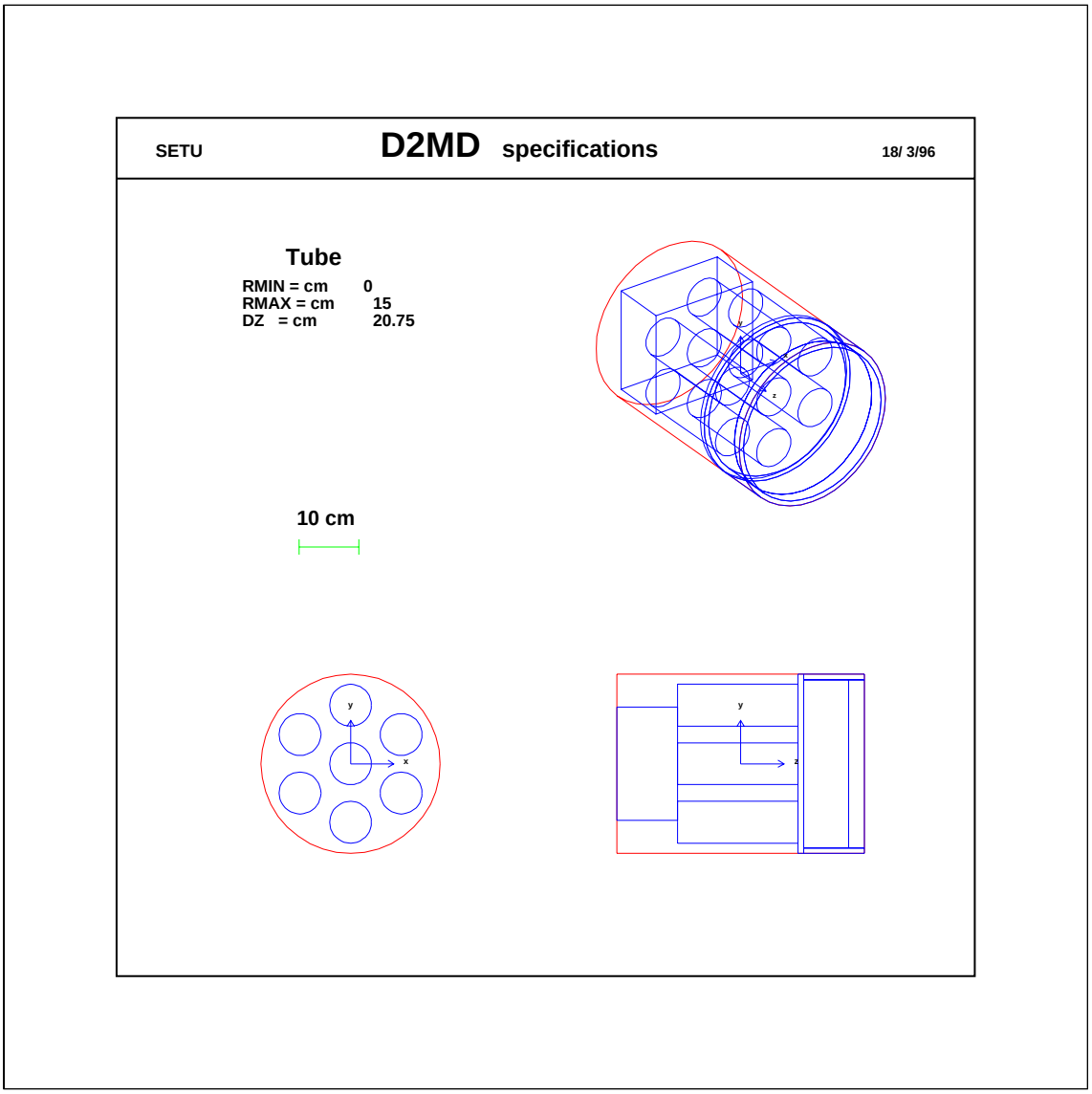

Fig. 4.7. Views of the HIres D2 module model.

D2RG:

1) Remainder of aluminum support plate: 13.369 kg of 26.0 kg
2) Misc. small parts (Al): 1.000 kg
3) D2 wire harness not included in modules: 17.76 kg (Cu: 40%, C: 53%, H: 7%)

Shape: TUBE Dimensions: *r1* = 66.250 cm, *r2* = 72.750 cm, *h* = 10.000 cm

Volume: 28384.290 cc Density: 1.132 g/cc Mass: 32.129 kg

Composition: H: 3.847% C: 29.683% Al: 43.360% Cu: 23.110%

4.5 The Structure Subsystem

The structure of COMPTEL consists of four basic components: the upper, middle (including CAL units), lower and D2 structure assemblies. The upper, lower and D2 structure assemblies are modeled by cylindrical tubes, while the middle assembly is a hollow frustrum. Data for the mass and density come from the initial GRO mass model (COM-TN-UNH-F70-050), which was based on estimates and measurements documented in various instrument review reports.

Total_Model_Structure_Mass:

STTP+STMD+STBT+STD2 = 176.754 kg

STTP

A cylindrical shell which approximates the mass distribution of the upper mechanical structure near D1. The following real parts are included in the mass and material composition estimates:

1) 27% of upper structure assembly (Al): 16.732 kg
2) 27% of thermal hardware not included in V1: (C: 6.440 kg, O: 2.146 kg, H: 0.271 kg)
3) 27% of Main harness: (Cu: 2.70 kg, C: 3.293 kg, H: 0.536 kg)

Shape: TUBE Dimensions: *r1* = 73.920 cm, *r2* = 75.000 cm, *h* = 106.500 cm

Volume: 28547.962 cc Density: 1.125 g/cc Mass: 32.117 kg

Composition: H: 2.513% C: 30.304% O: 6.682% Al: 52.094% Cu: 8.407%

STMD

A cylindrical shell which approximates the mass distribution of the middle mechanical structure near including the CAL units. The following real parts are included in the mass and material composition estimates:

1) 25% of upper structure assembly (Al): 15.493 kg
2) 25% of thermal hardware not included in V1: (C: 5.963 kg, O: 1.987 kg, H: 0.251 kg)
3) 25% of Veto+Main harness: (Cu: 2.500 kg, C: 3.049 kg, H: 0.496 kg)
4) 2 Calibration units (G.E.): 6.3 kg

Shape: TUBE Dimensions: *r1* = 83.920 cm, *r2* = 85.000 cm, *h* = 50.000 cm
r3 = 73.920 cm, *r4* = 75.000 cm

Volume: 26960.143 cc Density: 1.337 g/cc Mass: 36.039 kg

Composition: H: 2.073% C: 25.006% O: 7.262% Al: 51.730% Si: 1.748%
Fe: 0.874% Cu: 9.559% Sn: 0.874% Pb: 0.874%

STBT

A cylindrical shell which approximates the mass distribution of the lower mechanical structure near D1. The following real parts are included in the mass and material composition estimates:

1) 48% of upper structure assembly (Al): 29.746 kg
2) 79% of lower structure assembly (Al): 40.677 kg
2) Remaining thermal hardware: (C: 11.448 kg, O: 3.814 kg, H: 0.481 kg)
3) 48% of Main harness: (Cu: 4.8 kg, C: 5.855 kg, H: 0.953 kg)

Shape: TUBE Dimensions: *r1* = 83.920 cm, *r2* = 85.000 cm, *h* = 100.000 cm

Volume: 57313.206 cc Density: 1.706 g/cc Mass: 97.775 kg

Composition: H: 1.467% C: 17.697% O: 3.901% Al: 72.026% Cu: 4.909%

STD2

A cylindrical shell which approximates the mass distribution of the mechanical structure near D2. The following real parts are included in the mass and material composition estimates:

1) 21% of lower structure assembly (Al): 10.823 kg

Shape: TUBE Dimensions: *r1* = 73.920 cm, *r2* = 75.000 cm, *h* = 68.150 cm

Volume: 34434.400 cc Density: 0.314 g/cc Mass: 10.823 kg

Composition: Al: 10.823 kg (100%)

5 The LOres Mass Model

The low-resolution COMPTEL mass model is based on the same mass estimates as described in the previous section. Thus, the total and subsystem masses are identical. The LOres version differs from the HIres model in that several elements from the HIres version have been combined into simpler volumes as follows. In addition, the shape of the veto domes was changed from a sphere to a flat plate (this change alone significantly improves the processing performance of GEANT).

Fig. 5.1. Side view of the full SIM LOres model.

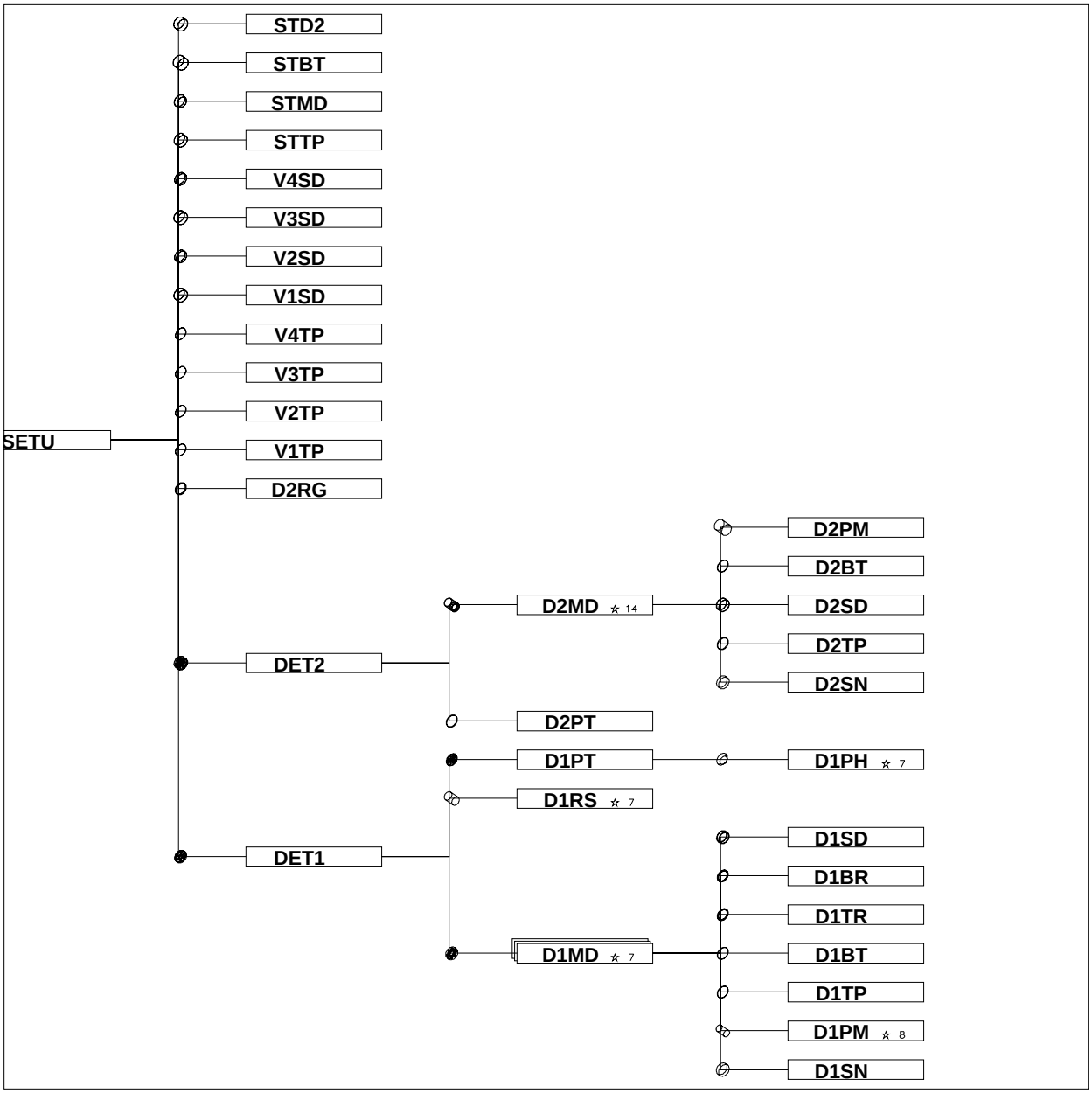

Fig. 5.2. COMPTEL SIM LOres model geometry tree.

D1SD

The hollow cylinder approximating the mass distribution along the sidewall of a D1 module is no longer occupied by the 8 D1 PMT volumes. Rather, mass of the quartz PMT windows is included in the D1SD mass.

```
Includes HIres mass: D1SD, 8*D1PQ
Shape: TUBE    Dimensions: r1 = 13.800 cm, r2 = 15.500 cm, h = 8.500 cm
Volume: 1330.103 cc  Density: 1.878 g/cc  Mass: 2497.666 g
Composition: H: 0.398%  C: 3.151%  Na: 0.117%  O: 9.385%  Al: 71.693%
             Si: 7.530%  Ti: 0.216%  Cr: 1.102%  Fe: 3.856%  Ni: 0.551%
             Cu: 2.001%
```

D1PT:

The D1 support platforms and electronics boxes of the HIres model are combined into a single cylindrical platform with conical holes below each D1 module.

```
Includes HIres mass: D1PT, D1P1, 7*D1FE, 7*D1JB, 7*D1HV
Shape: TUBE    Dimensions: r = 72.750 cm, h = 7.900 cm
Volume: 81178.334 cc Density: 0.639 g/cc  Mass: 51.885 kg
Daughter volumes: 7*D1PH
Composition: H: 0.829%  C: 4.959%  O: 4.439%  Al: 67.871%  Si: 4.439%
             Fe: 2.220%  Cu: 10.803%  Sn: 2.220%  Pb: 2.220%
```

D2BT:

The D2 module bottom cover and PMT quartz windows of the HIres model are combined into a single cylindrical bottom cover volume.

```
Includes HIres mass: D2BT, 8*D2PQ
Shape: TUBE    Dimensions: r = 15.000 cm, h = 1.000 cm
Volume: 706.858 cc   Density: 2.163 g/cc  Mass: 1528.752 g
Composition: H: 0.756%  C: 3.193%  O: 23.071%  Al: 52.264%  Si: 20.716%
```

D2PM:

The D2 module PMTs and electronics box of the HIres model are combined into a single cylindrical volume located below the D2 module.

```
Includes HIres mass: 8*D2PM, D2EB
Shape: TUBE    Dimensions: r = 14.085 cm, h = 30.325 cm
Volume: 18900.112 cc Density: 0.463 g/cc  Mass: 8.747 kg
Composition: H: 0.648%  Be: 0.569%  C: 6.549%  N: 0.523  O: 10.529%
             Al: 34.042%  Si: 9.039%  Cl: 3.115%  K: 0.284%  Cr: 0.216%
             Fe: 3.877%  Ni: 7.857% Cu: 15.827%  Zn: 0.944%  Sn: 2.706%
             Pb: 3.275%
```

STTP

The V1/V2 PMT assemblies and upper support structure of the HIres model are combined into a single upper support structure volume.

```
Includes HIres mass: V1PR, V2PR, STTP
Shape: TUBE    Dimensions: r1 = 73.920 cm, r2 = 75.000 cm, h = 106.500 cm
Volume: 28547.962 cc Density: 2.926 g/cc  Mass: 83.537 kg
Composition: H: 2.136%  C: 18.452%  O: 6.993%  Al: 55.509%  Si: 2.447%
             Fe: 1.223%  Cu: 10.794%  Sn: 1.223%  Pb: 1.223%
```

STD2

The V3/V4 PMT assemblies and D2 support structure of the HIres model are combined into a single D2 support structure volume.

```
Includes HIres mass: V3PR, V4PR, STD2
Shape: TUBE    Dimensions: r1 = 73.920 cm, r2 = 75.000 cm, h = 68.150 cm
Volume: 34434.400 cc Density: 1.808 g/cc  Mass: 62.243 kg
Composition: H: 1.570%  C: 9.129%  O: 5.938%  Al: 65.006%  Si: 3.284%
             Fe: 1.642%  Cu: 10.147%  Sn: 1.642%  Pb: 1.642%
```

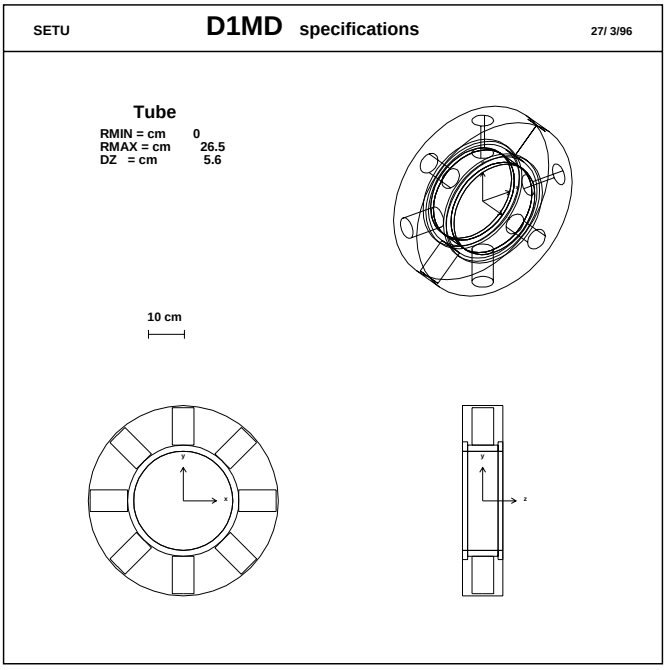
SETU
D1MD specifications
27/ 3/96
Tube
RMIN = cm 0
RMAX = cm 26.5
DZ = cm 5.6
10 cm
y
x
y
z

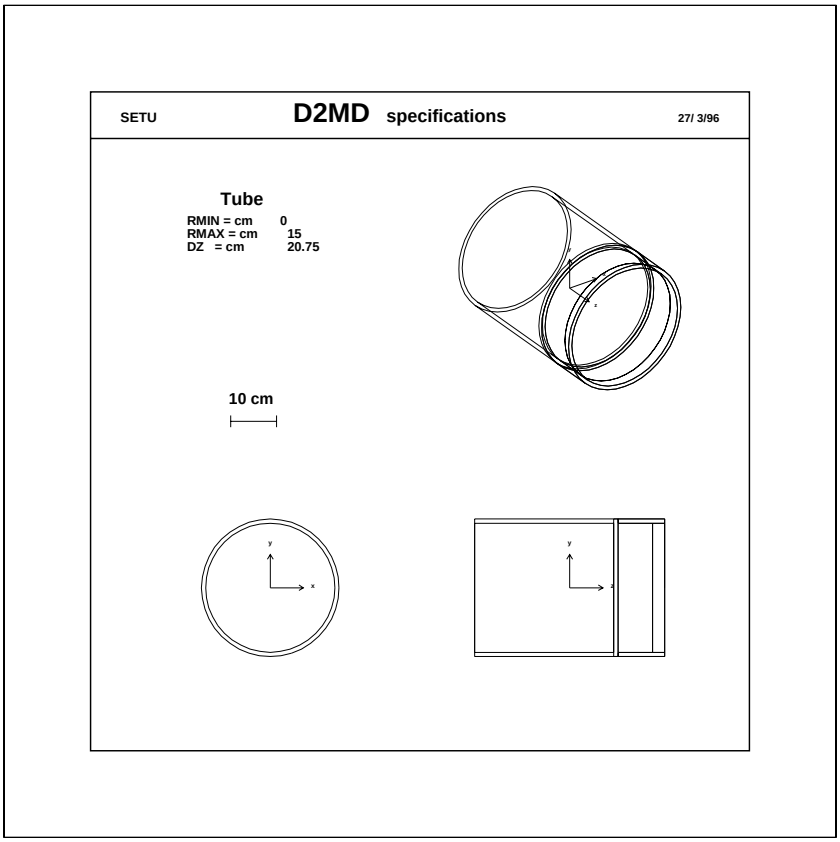

Fig. 5.3. COMPTEL SIM LOres D1/D2 module models.

6 Comparisons with Documented Mass Estimates

6.1 Mass Above and Between D1 and D2 Detectors

The following table compares the revised SIM model masses above and between the D1 and D2 detectors with the estimates given in COM-TN-MBB-L31-007 ("Mass Estimation Above and Between D1- and D2-Detectors") and those of the previous SIM mass model (U-IDT-1011) as given in COM-RP-UNH-SIM-039. Results are the same for both the HI- and LOres model versions.

Mass above D1 (gm cm^{-2})

	SIM (U-IDT-1011)	SIM (HIres/LOres)	MBB DOCUMENT
V1 Top	1.8530	1.8530	1.8530
D1 Housing Top	0.3960	0.3960	0.3960
Total	2.2490	2.2490	2.2490

Mass between D1 and D2 (gm cm^{-2})

	SIM (U-IDT-1011)	SIM (HIres/LOres)	MBB DOCUMENT
D1 Housing Bot.	0.4819	0.4820	0.4820
V2 Top	1.7762	1.7760	1.7760
V3 Top	1.7762	1.7760	1.7760
D2 Platform	0.9146	0.9160	0.9160
D2 Housing Top	0.6318	0.6330	0.6330
Total	5.5807	5.5830	5.5830

6.2 Total and Subsystem Masses

The following table compares the revised SIM model masses with the actual COMPTEL mass properties given in COM-TN-MBB-L31-008 ("Mass Properties Summary"). Note that the masses of some components in the SIM model (most notably the harnesses) are divided among several different volumes. In such cases, the total mass attributed to the component is listed below. Results are the same for both the HI- and LOres model versions.

Total Mass Summary (kg)

COMPONENT	SIM	MBB
Single D1 module with PMTs and reservoir	14.710	15.300
Total D1 detector platform (including small parts)	27.832	23.700
D1 electronics boxes (FEE, HVJB, HVPS)	18.900	18.900
Total D1 assembly (less D1 harness)	**149.702**	**149.700**
Single D2 module with PMTs and electronics boxes	28.200	28.200
Total D2 detector platform (including small parts)	27.000	27.000
Total D2 assembly (less D2 harness)	**421.800**	**421.800**
Total structure (less main harness, thermal HW and CAL units)	113.470	113.500
Total V1 veto assembly (less V1 harness, thermal HW and micro-meteorite shield)	108.200	108.200
Total V2 veto assembly (less V2 harness)	67.900	67.900
Total V3 veto assembly (less V3 harness)	108.160	108.200
Total V4 veto assembly (less V4 harness)	67.900	67.900
Calibration units	6.300	6.300
Total Harnesses (Main, D1, D2, veto, Cal.)	70.102	70.100
Total thermal hardware	39.000	39.000
Micro-meteorite shield	10.000	10.000
Total Instrument Mass	**1162.534**	**1162.600**

7 Summary Tables

The following tables provide summary information describing the various volume elements which make up the HIres COMPTEL SIM mass model.

Table 7.1a. HIres Volume Materials Definitions.

0========== MATERIALS ==========

0MATERIAL	A	Z	DENSITY	RADIAT L	ABSORP L	NMIXT	A	Z	W
1 VACUUM	0.000	0.000	0.000	0.100E+17	0.100E+17	1			
2 ALUMINIUM	26.980	13.000	2.700	0.890E+01	0.372E+02	1			
3 LIQ NE213A	10.940	5.513	0.889	0.491E+02	0.102E+03	2	A	Z	W
							1.01	1.00	0.097
							12.01	6.00	0.903
4 NaI(Tl)	110.967	46.558	3.670	0.259E+01	0.469E+02	2	A	Z	W
							22.99	11.00	0.153
							126.90	53.00	0.847
5 V1/V3 PMT AS	34.280	15.898	0.592	0.359E+02	0.204E+03	9	A	Z	W
							1.01	1.00	0.019
							12.01	6.00	0.108
							16.00	8.00	0.070
							26.98	13.00	0.589
							28.09	14.00	0.038
							55.85	26.00	0.019
							63.54	29.00	0.119
							118.69	50.00	0.019
							207.19	82.00	0.019
6 V1 DOME	11.135	5.609	1.070	0.404E+02	0.855E+02	3	A	Z	W
							1.01	1.00	0.085
							12.00	6.00	0.898
							16.00	8.00	0.017
7 V2 DOME	10.978	5.530	1.070	0.407E+02	0.847E+02	2	A	Z	W
							1.01	1.00	0.094
							12.01	6.00	0.906
8 V3 DOME	11.033	5.555	1.070	0.407E+02	0.851E+02	2	A	Z	W
							1.01	1.00	0.089
							12.01	6.00	0.911
9 V4 DOME	10.978	5.530	1.070	0.407E+02	0.847E+02	2	A	Z	W
							1.01	1.00	0.094
							12.01	6.00	0.906
10 V2/V4 PMT AS	34.853	16.129	0.729	0.283E+02	0.162E+03	9	A	Z	W
							1.01	1.00	0.019
							12.01	6.00	0.113
							16.00	8.00	0.074
							26.98	13.00	0.563
							28.09	14.00	0.041
							55.85	26.00	0.021
							63.54	29.00	0.127
							118.69	50.00	0.021
							207.19	82.00	0.021
11 TOP STRUCTUR	24.131	11.588	1.125	0.235E+02	0.992E+02	5	A	Z	W
							1.01	1.00	0.025
							12.01	6.00	0.303
							16.00	8.00	0.067
							26.98	13.00	0.521
							63.54	29.00	0.084
12 MID STRUCTRU	28.045	13.225	1.337	0.182E+02	0.857E+02	9	A	Z	W
							1.01	1.00	0.021
							12.01	6.00	0.250
							16.00	8.00	0.073
							26.98	13.00	0.517
							28.09	14.00	0.017
							55.85	26.00	0.009
							63.54	29.00	0.096
							118.69	50.00	0.009
							207.19	82.00	0.009
13 LOW STRUCTUR	25.317	12.176	1.706	0.149E+02	0.681E+02	5	A	Z	W
							1.01	1.00	0.015
							12.01	6.00	0.177
							16.00	8.00	0.039
							26.98	13.00	0.720
							63.54	29.00	0.049
14 D2 STRUCTURE	26.981	13.000	0.314	0.763E+02	0.392E+03	1			
15 D1 MOD TOP M	25.964	12.504	0.293	0.843E+02	0.406E+03	7	A	Z	W
							1.01	1.00	0.011
							12.01	6.00	0.065
							16.00	8.00	0.050
							22.99	11.00	0.022
							26.98	13.00	0.798

Table 7.1a. HIres Volume Materials Definitions (Continued).

```
                                                                                28.09  14.00  0.013
                                                                                47.90  22.00  0.041
16 D1 MOD BOTTO          31.680    15.180     0.357 0.596E+02 0.347E+03   9     A      Z     W
                                                                                 1.01   1.00  0.009
                                                                                12.01   6.00  0.054
                                                                                16.00   8.00  0.041
                                                                                22.99  11.00  0.018
                                                                                26.98  13.00  0.656
                                                                                28.09  14.00  0.011
                                                                                47.90  22.00  0.034
                                                                                55.85  26.00  0.045
                                                                                58.71  28.00  0.134
17 D1 MOD SIDE           28.435    13.648     2.387 0.970E+01 0.513E+02  11     A      Z     W
                                                                                 1.01   1.00  0.004
                                                                                12.01   6.00  0.035
                                                                                16.00   8.00  0.046
                                                                                22.99  11.00  0.002
                                                                                26.98  13.00  0.795
                                                                                28.09  14.00  0.032
                                                                                47.90  22.00  0.001
                                                                                52.00  24.00  0.012
                                                                                55.85  26.00  0.043
                                                                                58.71  28.00  0.006
                                                                                63.54  29.00  0.022
18 D1 MOD TR MI          28.567    13.714     2.838 0.812E+01 0.438E+02   5     A      Z     W
                                                                                12.01   6.00  0.004
                                                                                26.98  13.00  0.937
                                                                                52.00  24.00  0.012
                                                                                55.85  26.00  0.041
                                                                                58.71  28.00  0.006
19 D1 MOD BR MI          28.577    13.719     2.822 0.816E+01 0.441E+02   5     A      Z     W
                                                                                12.01   6.00  0.004
                                                                                26.98  13.00  0.937
                                                                                52.00  24.00  0.012
                                                                                55.85  26.00  0.041
                                                                                58.71  28.00  0.006
20 D1 PMT MIX            41.334    19.157     1.297 0.140E+02 0.990E+02  16     A      Z     W
                                                                                 1.01   1.00  0.005
                                                                                 9.01   4.00  0.008
                                                                                12.01   6.00  0.054
                                                                                14.01   7.00  0.008
                                                                                16.00   8.00  0.116
                                                                                26.98  13.00  0.311
                                                                                28.09  14.00  0.094
                                                                                35.45  17.00  0.045
                                                                                39.10  19.00  0.004
                                                                                52.00  24.00  0.003
                                                                                55.85  26.00  0.038
                                                                                58.71  28.00  0.114
                                                                                63.54  29.00  0.144
                                                                                65.37  30.00  0.014
                                                                               118.69  50.00  0.021
                                                                               207.19  82.00  0.021
21 PMT QUARTZ            21.649    10.805     2.173 0.124E+02 0.527E+02   2     A      Z     W
                                                                                16.00   8.00  0.533
                                                                                28.09  14.00  0.467
22 D1 RESERVOIR          47.353    22.142     1.499 0.106E+02 0.893E+02   5     A      Z     W
                                                                                 1.01   1.00  0.018
                                                                                12.01   6.00  0.163
                                                                                52.00  24.00  0.164
                                                                                55.85  26.00  0.574
                                                                                58.71  28.00  0.082
23 D1 PLATFORM           31.774    14.927     0.330 0.667E+02 0.365E+03   9     A      Z     W
                                                                                 1.01   1.00  0.019
                                                                                12.01   6.00  0.112
                                                                                16.00   8.00  0.018
                                                                                26.98  13.00  0.685
                                                                                28.09  14.00  0.018
                                                                                55.85  26.00  0.009
                                                                                63.54  29.00  0.121
                                                                               118.69  50.00  0.009
                                                                               207.19  82.00  0.009
24 D1 FEE MIX            46.516    20.950     0.722 0.242E+02 0.182E+03   7     A      Z     W
                                                                                16.00   8.00  0.100
                                                                                26.98  13.00  0.500
                                                                                28.09  14.00  0.100
                                                                                55.85  26.00  0.050
                                                                                63.54  29.00  0.150
                                                                               118.69  50.00  0.050
                                                                               207.19  82.00  0.050
```

Table 7.1a. HIres Volume Materials Definitions (continued).

```
25 D1 HVJB MIX            46.516    20.950     1.317 0.133E+02 0.999E+02   7     A      Z     W
                                                                                 16.00   8.00  0.100
                                                                                 26.98  13.00  0.500
                                                                                 28.09  14.00  0.100
                                                                                 55.85  26.00  0.050
                                                                                 63.54  29.00  0.150
                                                                                118.69  50.00  0.050
                                                                                207.19  82.00  0.050
26 D1 HVPS MIX            46.516    20.950     1.450 0 .121E+02 0.907E+02   7     A      Z     W
                                                                                 16.00   8.00  0.100
                                                                                 26.98  13.00  0.500
                                                                                 28.09  14.00  0.100
                                                                                 55.85  26.00  0.050
                                                                                 63.54  29.00  0.150
                                                                                118.69  50.00  0.050
                                                                                207.19  82.00  0.050
27 D2 MOD TOP M           24.103    11.775     0.239 0.107E+03 0.451E+03   7     A      Z     W
                                                                                  1.01   1.00  0.056
                                                                                 12.01   6.00  0.253
                                                                                 16.00   8.00  0.187
                                                                                 26.98  13.00  0.188
                                                                                 28.09  14.00  0.180
                                                                                 55.85  26.00  0.034
                                                                                 58.71  28.00  0.102
28 D2 MOD SIDE            24.153    11.730     0.914 0.282E+02 0.126E+03   5     A      Z     W
                                                                                  1.01   1.00  0.022
                                                                                 12.01   6.00  0.096
                                                                                 16.00   8.00  0.082
                                                                                 26.98  13.00  0.722
                                                                                 28.09  14.00  0.078
29 D2 MOD BOTTO           25.443    12.310     2.156 0.116E+02 0.551E+02   5     A      Z     W
                                                                                  1.01   1.00  0.012
                                                                                 12.01   6.00  0.052
                                                                                 16.00   8.00  0.045
                                                                                 26.98  13.00  0.847
                                                                                 28.09  14.00  0.044
30 D2 PMT MIX             41.334    19.157     1.119 0.163E+02 0.115E+03  16     A      Z     W
                                                                                  1.01   1.00  0.005
                                                                                  9.01   4.00  0.008
                                                                                 12.01   6.00  0.054
                                                                                 14.01   7.00  0.008
                                                                                 16.00   8.00  0.116
                                                                                 26.98  13.00  0.311
                                                                                 28.09  14.00  0.094
                                                                                 35.45  17.00  0.045
                                                                                 39.10  19.00  0.004
                                                                                 52.00  24.00  0.003
                                                                                 55.85  26.00  0.038
                                                                                 58.71  28.00  0.114
                                                                                 63.54  29.00  0.144
                                                                                 65.37  30.00  0.014
                                                                                118.69  50.00  0.021
                                                                                207.19  82.00  0.021
31 D2 ELECTRONI           44.007    19.907     0.706 0.257E+02 0.180E+03   9     A      Z     W
                                                                                  1.01   1.00  0.011
                                                                                 12.01   6.00  0.092
                                                                                 16.00   8.00  0.083
                                                                                 26.98  13.00  0.414
                                                                                 28.09  14.00  0.083
                                                                                 55.85  26.00  0.041
                                                                                 63.54  29.00  0.193
                                                                                118.69  50.00  0.041
                                                                                207.19  82.00  0.041
32 D2 PLATFORM            26.440    12.748     0.092 0.266E+03 0.133E+04   3     A      Z     W
                                                                                  1.01   1.00  0.005
                                                                                 12.01   6.00  0.028
                                                                                 26.98  13.00  0.967
33 D2 RING MIX            29.987    14.158     1.132 0.202E+02 0.101E+03   4     A      Z     W
                                                                                  1.01   1.00  0.038
                                                                                 12.01   6.00  0.297
                                                                                 26.98  13.00  0.434
                                                                                 63.54  29.00  0.231
```

Table 7.1b. LOres Volume Materials Definitions.

```
0==============================================   MATERIALS   ==============================================
0MATERIAL                              A         Z     DENSITY  RADIAT L  ABSORP L NMIXT

        1 VACUUM                    0.000     0.000     0.000 0.100E+17 0.100E+17   1
        2 ALUMINIUM                26.980    13.000     2.700 0.890E+01 0.372E+02   1
        3 LIQ NE213A               10.940     5.513     0.889 0.491E+02 0.102E+03   2     A      Z     W
                                                                                        1.01   1.00  0.097
                                                                                       12.01   6.00  0.903
        4 NaI(Tl)                 110.967    46.558     3.670 0.259E+01 0.469E+02   2     A      Z     W
                                                                                       22.99  11.00  0.153
                                                                                      126.90  53.00  0.847
        5 TOP STRUCTUR             30.548    14.309     2.926 0.783E+01 0.400E+02   9     A      Z     W
                                                                                        1.01   1.00  0.021
                                                                                       12.01   6.00  0.185
                                                                                       16.00   8.00  0.070
                                                                                       26.98  13.00  0.555
                                                                                       28.09  14.00  0.024
                                                                                       55.85  26.00  0.012
                                                                                       63.54  29.00  0.108
                                                                                      118.69  50.00  0.012
                                                                                      207.19  82.00  0.012
        6 V1 DOME                  11.135     5.609     1.070 0.404E+02 0.855E+02   3     A      Z     W
                                                                                        1.01   1.00  0.085
                                                                                       12.00   6.00  0.898
                                                                                       16.00   8.00  0.017
        7 V2 DOME                  10.978     5.530     1.070 0.407E+02 0.847E+02   2     A      Z     W
                                                                                        1.01   1.00  0.094
                                                                                       12.01   6.00  0.906
        8 V3 DOME                  11.033     5.555     1.070 0.407E+02 0.851E+02   2     A      Z     W
                                                                                        1.01   1.00  0.089
                                                                                       12.01   6.00  0.911
        9 V4 DOME                  10.978     5.530     1.070 0.407E+02 0.847E+02   2     A      Z     W
                                                                                        1.01   1.00  0.094
                                                                                       12.01   6.00  0.906
       10 MID STRUCTRU             28.045    13.225     1.337 0.182E+02 0.857E+02   9     A      Z     W
                                                                                        1.01   1.00  0.021
                                                                                       12.01   6.00  0.250
                                                                                       16.00   8.00  0.073
                                                                                       26.98  13.00  0.517
                                                                                       28.09  14.00  0.017
                                                                                       55.85  26.00  0.009
                                                                                       63.54  29.00  0.096
                                                                                      118.69  50.00  0.009
                                                                                      207.19  82.00  0.009
       11 LOW STRUCTUR             25.317    12.176     1.706 0.149E+02 0.681E+02   5     A      Z     W
                                                                                        1.01   1.00  0.015
                                                                                       12.01   6.00  0.177
                                                                                       16.00   8.00  0.039
                                                                                       26.98  13.00  0.720
                                                                                       63.54  29.00  0.049
       12 D2 STRUCTURE             33.239    15.486     1.808 0.119E+02 0.670E+02   9     A      Z     W
                                                                                        1.01   1.00  0.016
                                                                                       12.01   6.00  0.091
                                                                                       16.00   8.00  0.059
                                                                                       26.98  13.00  0.650
                                                                                       28.09  14.00  0.033
                                                                                       55.85  26.00  0.016
                                                                                       63.54  29.00  0.101
                                                                                      118.69  50.00  0.016
                                                                                      207.19  82.00  0.016
       13 D1 MOD TOP M             25.964    12.504     0.293 0.843E+02 0.406E+03   7     A      Z     W
                                                                                        1.01   1.00  0.011
                                                                                       12.01   6.00  0.065
                                                                                       16.00   8.00  0.050
                                                                                       22.99  11.00  0.022
                                                                                       26.98  13.00  0.798
                                                                                       28.09  14.00  0.013
                                                                                       47.90  22.00  0.041
       14 D1 MOD BOTTO             31.680    15.180     0.357 0.596E+02 0.347E+03   9     A      Z     W
                                                                                        1.01   1.00  0.009
                                                                                       12.01   6.00  0.054
                                                                                       16.00   8.00  0.041
                                                                                       22.99  11.00  0.018
                                                                                       26.98  13.00  0.656
                                                                                       28.09  14.00  0.011
                                                                                       47.90  22.00  0.034
                                                                                       55.85  26.00  0.045
                                                                                       58.71  28.00  0.134
```

Table 7.1b. LOres Volume Materials Definitions (continued).

							A	Z	W
15 D1 MOD SIDE	28.442	13.658	1.878	0.123E+02	0.654E+02	11	1.01	1.00	0.004
							12.01	6.00	0.032
							16.00	8.00	0.001
							22.99	11.00	0.094
							26.98	13.00	0.717
							28.09	14.00	0.075
							47.90	22.00	0.002
							52.00	24.00	0.011
							55.85	26.00	0.039
							58.71	28.00	0.006
							63.54	29.00	0.020
							A	Z	W
16 D1 MOD TR MI	28.567	13.714	2.838	0.812E+01	0.438E+02	5	12.01	6.00	0.004
							26.98	13.00	0.937
							52.00	24.00	0.012
							55.85	26.00	0.041
							58.71	28.00	0.006
							A	Z	W
17 D1 MOD BR MI	28.577	13.719	2.822	0.816E+01	0.441E+02	5	12.01	6.00	0.004
							26.98	13.00	0.937
							52.00	24.00	0.012
							55.85	26.00	0.041
							58.71	28.00	0.006
							A	Z	W
18 D1 PMT MIX	41.334	19.157	1.297	0.140E+02	0.990E+02	16	1.01	1.00	0.005
							9.01	4.00	0.008
							12.01	6.00	0.054
							14.01	7.00	0.008
							16.00	8.00	0.116
							26.98	13.00	0.311
							28.09	14.00	0.094
							35.45	17.00	0.045
							39.10	19.00	0.004
							52.00	24.00	0.003
							55.85	26.00	0.038
							58.71	28.00	0.114
							63.54	29.00	0.144
							65.37	30.00	0.014
							118.69	50.00	0.021
							207.19	82.00	0.021
							A	Z	W
19 D1 RESERVOIR	47.353	22.142	1.499	0.106E+02	0.893E+02	5	1.01	1.00	0.018
							12.01	6.00	0.163
							52.00	24.00	0.164
							55.85	26.00	0.574
							58.71	28.00	0.082
							A	Z	W
20 D1 PLATFORM	36.212	16.746	0.639	0.320E+02	0.195E+03	9	1.01	1.00	0.008
							12.01	6.00	0.050
							16.00	8.00	0.044
							26.98	13.00	0.679
							28.09	14.00	0.044
							55.85	26.00	0.022
							63.54	29.00	0.108
							118.69	50.00	0.022
							207.19	82.00	0.022
							A	Z	W
21 D2 MOD TOP M	24.103	11.775	0.239	0.107E+03	0.451E+03	7	1.01	1.00	0.056
							12.01	6.00	0.253
							16.00	8.00	0.187
							26.98	13.00	0.188
							28.09	14.00	0.180
							55.85	26.00	0.034
							58.71	28.00	0.102
							A	Z	W
22 D2 MOD SIDE	24.153	11.730	0.914	0.282E+02	0.126E+03	5	1.01	1.00	0.022
							12.01	6.00	0.096
							16.00	8.00	0.082
							26.98	13.00	0.722
							28.09	14.00	0.078
							A	Z	W
23 D2 MOD BOTTO	24.002	11.739	2.163	0.119E+02	0.541E+02	5	1.01	1.00	0.008
							12.01	6.00	0.032
							16.00	8.00	0.231
							26.98	13.00	0.523
							28.09	14.00	0.207

Table 7.1b. LOres Volume Materials Definitions (continued).

```
24 D2 PMT MIX            43.102    19.747     0.463 0.389E+02 0.277E+03  16     A      Z     W
                                                                                 1.01   1.00  0.006
                                                                                 9.01   4.00  0.006
                                                                                12.01   6.00  0.065
                                                                                14.01   7.00  0.005
                                                                                16.00   8.00  0.105
                                                                                26.98  13.00  0.340
                                                                                28.09  14.00  0.090
                                                                                35.45  17.00  0.031
                                                                                39.10  19.00  0.003
                                                                                52.00  24.00  0.002
                                                                                55.85  26.00  0.039
                                                                                58.71  28.00  0.079
                                                                                63.54  29.00  0.158
                                                                                65.37  30.00  0.009
                                                                               118.69  50.00  0.027
                                                                               207.19  82.00  0.033
25 D2 PLATFORM           26.440    12.748     0.092 0.266E+03 0.133E+04   3     A      Z     W
                                                                                 1.01   1.00  0.005
                                                                                12.01   6.00  0.028
                                                                                26.98  13.00  0.967
26 D2 RING MIX           29.987    14.158     1.132 0.202E+02 0.101E+03   4     A      Z     W
                                                                                 1.01   1.00  0.038
                                                                                12.01   6.00  0.297
                                                                                26.98  13.00  0.434
                                                                                63.54  29.00  0.231
```

Table 7.2a. HIres Volume Summary Table.

```
0================================      VOLUMES       ================================
0VOLUME SHAPE MATERIAL        DENS   PARAMETERS (SEE GEANT MANUAL)
 1 SETU TUBE   1 VACUUM       0.000  0.000E+00 0.300E+03 0.500E+03
 2 DET1 TUBE   1 VACUUM       0.000  0.000E+00 0.730E+02 0.205E+02
 3 D1P1 TUBE   2 ALUMINUM     2.700  0.000E+00 0.702E+02 0.150E+00
 4 D1H1 TUBE   1 VACUUM       0.000  0.000E+00 0.138E+02 0.150E+00
 5 D1PT TUBE  23 D1 PLATFORM  0.144  0.000E+00 0.728E+02 0.380E+01
 6 D1PH CONE   1 VACUUM       0.000  0.380E+01 0.000E+00 0.200E+02 0.000E+00 0.138E+02
 7 D1FE BOX   24 D1 FEE MIX   0.722  0.101E+02 0.285E+01 0.124E+02
 8 D1JB BOX   25 D1 HVJB MIX  1.317  0.600E+01 0.150E+01 0.256E+01
 9 D1HV BOX   26 D1 HVPS MIX  1.450  0.185E+01 0.350E+01 0.512E+01
10 D1MD TUBE   1 VACUUM       0.000  0.000E+00 0.246E+02 0.560E+01
11 D1SN TUBE   3 LIQ NE213A   0.889  0.000E+00 0.138E+02 0.425E+01
12 D1TP TUBE  15 D1 MOD TOP   0.293  0.000E+00 0.138E+02 0.675E+00
13 D1BT TUBE  16 D1 MOD BOTTO 0.357  0.000E+00 0.138E+02 0.675E+00
14 D1SD TUBE  17 D1 MOD SIDE  2.312  0.138E+02 0.155E+02 0.425E+01
15 D1TR TUBE  18 D1 MOD TR    2.838  0.138E+02 0.164E+02 0.675E+00
16 D1BR TUBE  19 D1 MOD BR    2.822  0.138E+02 0.164E+02 0.675E+00
17 D1RS TUBE  22 D1 RESERVOIR 1.499  0.000E+00 0.565E+01 0.790E+01
18 D1PM TUBE  20 D1 PMT MIX   1.297  0.000E+00 0.300E+01 0.547E+01
19 D1PQ TUBE  21 PMT QUARTZ   2.173  0.000E+00 0.300E+01 0.250E+00
20 DET2 TUBE   1 VACUUM       0.000  0.000E+00 0.728E+02 0.261E+02
21 D2PT TUBE  32 D2 PLATFORM  0.092  0.000E+00 0.662E+02 0.500E+01
22 D2RG TUBE  33 D2 RING MIX  1.389  0.662E+02 0.728E+02 0.500E+01
23 D2MD TUBE   1 VACUUM       0.000  0.000E+00 0.150E+02 0.208E+02
24 D2SN TUBE   4 NAI(TL)      3.670  0.000E+00 0.141E+02 0.376E+01
25 D2TP TUBE  27 D2 MOD TOP   0.239  0.000E+00 0.141E+02 0.133E+01
26 D2SD TUBE  28 D2 MOD SIDE  1.746  0.141E+02 0.150E+02 0.509E+01
27 D2BT TUBE  29 D2 MOD BOTTO 2.156  0.000E+00 0.150E+02 0.500E+00
28 D2PQ TUBE  21 PMT QUARTZ   2.173  0.000E+00 0.350E+01 0.500E+00
29 D2PM TUBE  30 D2 PMT MIX   0.904  0.000E+00 0.350E+01 0.101E+02
30 D2EB BOX   31 D2 ELECTRONI 0.706  0.988E+01 0.950E+01 0.510E+01
31 STTP TUBE  11 TOP STRUCTUR 0.942  0.739E+02 0.750E+02 0.282E+02
32 STMD CONE  12 MID STRUCTUR 1.196  0.250E+02 0.839E+02 0.850E+02 0.739E+02 0.750E+02
33 STBT TUBE  13 LOW STRUCTUR 1.668  0.839E+02 0.850E+02 0.500E+02
```

Table 7.2a. HIres Volume Summary Table (continued).

```
34 STD2 TUBE  14 D2 STRUCTURE 0.314  0.739E+02 0.750E+02 0.341E+02
35 V1SD TUBE   6 V1 DOME      1.070  0.757E+02 0.777E+02 0.317E+02
36 V1TP SPHE   6 V1 DOME      1.070  0.140E+03 0.142E+03 0.000E+00 0.332E+02 0.000E+00 0.360E+03
37 V1PR TUBE   5 V1/V3 PMT    0.603  0.750E+02 0.820E+02 0.650E+01
38 V2SD TUBE   7 V2 DOME      1.070  0.682E+02 0.696E+02 0.140E+02
39 V2TP SPHE   7 V2 DOME      1.070  0.148E+03 0.150E+03 0.152E+03 0.180E+03 0.000E+00 0.360E+03
40 V2PR TUBE  10 V2/V4 PMT    0.729  0.665E+02 0.725E+02 0.650E+01
41 V3SD TUBE   8 V3 DOME      1.070  0.761E+02 0.777E+02 0.317E+02
42 V3TP SPHE   8 V3 DOME      1.070  0.140E+03 0.142E+03 0.000E+00 0.332E+02 0.000E+00 0.360E+03
43 V3PR TUBE   5 V1/V3 PMT    0.603  0.750E+02 0.820E+02 0.650E+01
44 V4SD TUBE   9 V4 DOME      1.070  0.682E+02 0.696E+02 0.140E+02
45 V4TP SPHE   9 V4 DOME      1.070  0.148E+03 0.150E+03 0.152E+03 0.180E+03 0.000E+00 0.360E+03
46 V4PR TUBE  10 V2/V4 PMT    0.729  0.665E+02 0.725E+02 0.650E+01
```

Table 7.2b. LOres Volume Summary Table.

```
0=================================      VOLUMES       ================================
0VOLUME SHAPE MATERIAL        DENS   PARAMETERS (SEE GEANT MANUAL)

 1 SETU TUBE   1 VACUUM       0.000  0.000E+00 0.300E+03 0.500E+03
 2 DET1 TUBE   1 VACUUM       0.000  0.000E+00 0.730E+02 0.120E+02
 3 D1PT TUBE  20 D1 PLATFORM  0.639  0.000E+00 0.728E+02 0.395E+01
 4 D1PH CONE   1 VACUUM       0.000  0.395E+01 0.000E+00 0.200E+02 0.000E+00 0.138E+02
 5 D1MD TUBE   1 VACUUM       0.000  0.000E+00 0.265E+02 0.560E+01
 6 D1SN TUBE   3 LIQ NE213A   0.889  0.000E+00 0.138E+02 0.425E+01
 7 D1TP TUBE  13 D1 MOD TOP   0.293  0.000E+00 0.138E+02 0.675E+00
 8 D1BT TUBE  14 D1 MOD BOTTO 0.357  0.000E+00 0.138E+02 0.675E+00
 9 D1SD TUBE  15 D1 MOD SIDE  1.878  0.138E+02 0.155E+02 0.425E+01
10 D1TR TUBE  16 D1 MOD TR    2.838  0.138E+02 0.164E+02 0.675E+00
11 D1BR TUBE  17 D1 MOD BR    2.822  0.138E+02 0.164E+02 0.675E+00
12 D1RS TUBE  19 D1 RESERVOIR 1.499  0.000E+00 0.565E+01 0.790E+01
13 D1PM TUBE  18 D1 PMT MIX   1.297  0.000E+00 0.300E+01 0.522E+01
14 DET2 TUBE   1 VACUUM       0.000  0.000E+00 0.662E+02 0.261E+02
15 D2PT TUBE  25 D2 PLATFORM  0.092  0.000E+00 0.662E+02 0.500E+01
16 D2RG TUBE  26 D2 RING MIX  1.132  0.662E+02 0.728E+02 0.500E+01
17 D2MD TUBE   1 VACUUM       0.000  0.000E+00 0.150E+02 0.208E+02
18 D2SN TUBE   4 NaI(TL)      3.670  0.000E+00 0.141E+02 0.376E+01
19 D2TP TUBE  21 D2 MOD TOP   0.239  0.000E+00 0.141E+02 0.133E+01
20 D2SD TUBE  22 D2 MOD SIDE  0.914  0.141E+02 0.150E+02 0.509E+01
21 D2BT TUBE  23 D2 MOD BOTTO 2.163  0.000E+00 0.150E+02 0.500E+00
22 D2PM TUBE  24 D2 PMT MIX   0.463  0.000E+00 0.141E+02 0.152E+02
23 STTP TUBE   5 TOP STRUCTUR 2.926  0.739E+02 0.750E+02 0.282E+02
24 STMD CONE  10 MID STRUCTUR 1.337  0.250E+02 0.839E+02 0.850E+02 0.739E+02 0.750E+02
25 STBT TUBE  11 LOW STRUCTUR 1.706  0.839E+02 0.850E+02 0.500E+02
26 STD2 TUBE  12 D2 STRUCTURE 1.808  0.739E+02 0.750E+02 0.341E+02
27 V1SD TUBE   6 V1 DOME MIX  1.070  0.757E+02 0.777E+02 0.322E+02
28 V1TP TUBE   6 V1 DOME MIX  1.070  0.000E+00 0.777E+02 0.866E+00
29 V2SD TUBE   7 V2 DOME MIX  1.070  0.680E+02 0.696E+02 0.142E+02
30 V2TP TUBE   7 V2 DOME MIX  1.070  0.000E+00 0.696E+02 0.830E+00
31 V3SD TUBE   8 V3 DOME MIX  1.070  0.758E+02 0.773E+02 0.322E+02
32 V3TP TUBE   8 V3 DOME MIX  1.070  0.000E+00 0.773E+02 0.830E+00
33 V4SD TUBE   9 V4 DOME MIX  1.070  0.680E+02 0.696E+02 0.142E+02
34 V4TP TUBE   9 V4 DOME MIX  1.070  0.000E+00 0.696E+02 0.800E+00
```

Table 7.3a. HIres Volume Rotation Matrices.

The relative position of a volume inside its mother is expressed in GEANT in terms of a translation vector (determined by the position information given in Table 7.4) and a rotation matrix. The rotation matrix expresses the transformation from the "Mother Reference System" (MRS) to the "Daughter Reference System" (DRS). A rotation matrix is determined by specifying the polar and azimuthal angles of the DRS axes with respect to the MRS axes. In the following table, THET1, 2, 3 are the polar angles of the X-, Y-, Z- axes, respectively, of the DRS with respect to the MRS and PHI1, 2, 3 are the azimuthal angles. At the time a volume is positioned, its rotation is assigned by specifying the number (IROT) of the rotation matrix (matrix 0 indicates no rotation).

```
0========================================== ROTATION MATRICES  ==========================================
0MATRIX <----------------- ROTATION MATRIX -----------------> FLAG  THET1   PHI1  THET2   PHI2  THET3   PHI3

      1-0.707 0.707 0.000 0.000 0.000 1.000 0.707 0.707 0.000  363  90.00 135.00   0.00   0.00  90.00  45.00
      2 0.000 1.000 0.000 0.000 0.000 1.000 1.000 0.000 0.000  465  90.00  90.00   0.00   0.00  90.00   0.00
      3 0.707 0.707 0.000 0.000 0.000 1.000 0.707-0.707 0.000  363  90.00  45.00   0.00   0.00  90.00 315.00
      4-1.000 0.000 0.000 0.000 0.000 1.000 0.000 1.000 0.000  562  90.00 180.00   0.00   0.00  90.00  90.00
      5 0.924 0.383 0.000-0.383 0.924 0.000 0.000 0.000 1.000  633  90.00  22.50  90.00 112.50   0.00   0.00
      6 1.000 0.000 0.000 0.000 0.000 1.000 0.000-1.000 0.000  164  90.00   0.00   0.00   0.00  90.00 270.00
      7 0.707-0.707 0.000 0.000 0.000 1.000-0.707-0.707 0.000  363  90.00 315.00   0.00   0.00  90.00 225.00
      8 0.000-1.000 0.000 0.000 0.000 1.000-1.000 0.000 0.000  261  90.00 270.00   0.00   0.00  90.00 180.00
      9-0.707-0.707 0.000 0.000 0.000 1.000-0.707 0.707 0.000  363  90.00 225.00   0.00   0.00  90.00 135.00
     10 0.500 0.866 0.000-0.866 0.500 0.000 0.000 0.000 1.000  633  90.00  60.00  90.00 150.00   0.00   0.00
     11-0.500 0.866 0.000-0.866-0.500 0.000 0.000 0.000 1.000  633  90.00 120.00  90.00 210.00   0.00   0.00
     12 0.000 1.000 0.000-1.000 0.000 0.000 0.000 0.000 1.000  625  90.00  90.00  90.00 180.00   0.00   0.00
     13-0.866-0.500 0.000 0.500-0.866 0.000 0.000 0.000 1.000  633  90.00 210.00  90.00 300.00   0.00   0.00
     14-0.966-0.259 0.000 0.259-0.966 0.000 0.000 0.000 1.000  633  90.00 195.00  90.00 285.00   0.00   0.00
```

Table 7.3b. LOres Volume Rotation Matrices.

```
0========================================== ROTATION MATRICES  ==========================================
0MATRIX <----------------- ROTATION MATRIX -----------------> FLAG  THET1   PHI1  THET2   PHI2  THET3   PHI3

      1-0.707 0.707 0.000 0.000 0.000 1.000 0.707 0.707 0.000  363  90.00 135.00   0.00   0.00  90.00  45.00
      2 0.000 1.000 0.000 0.000 0.000 1.000 1.000 0.000 0.000  465  90.00  90.00   0.00   0.00  90.00   0.00
      3 0.707 0.707 0.000 0.000 0.000 1.000 0.707-0.707 0.000  363  90.00  45.00   0.00   0.00  90.00 315.00
      4-1.000 0.000 0.000 0.000 0.000 1.000 0.000 1.000 0.000  562  90.00 180.00   0.00   0.00  90.00  90.00
      5 0.924 0.383 0.000-0.383 0.924 0.000 0.000 0.000 1.000  633  90.00  22.50  90.00 112.50   0.00   0.00
      6 1.000 0.000 0.000 0.000 0.000 1.000 0.000-1.000 0.000  164  90.00   0.00   0.00   0.00  90.00 270.00
      7 0.707-0.707 0.000 0.000 0.000 1.000-0.707-0.707 0.000  363  90.00 315.00   0.00   0.00  90.00 225.00
      8 0.000-1.000 0.000 0.000 0.000 1.000-1.000 0.000 0.000  261  90.00 270.00   0.00   0.00  90.00 180.00
      9-0.707-0.707 0.000 0.000 0.000 1.000-0.707 0.707 0.000  363  90.00 225.00   0.00   0.00  90.00 135.00
```

Table 7.4a. HIres Volume Positioning Table.

LEVEL2

VOLUME **SETU** CONTAINS **18** DAUGHTER VOLUMES POSITIONED IN THE DRS AS FOLLOWS:

NAME	COPY#	MOTHER	X0	Y0	Z0	IROT	KONLY	ZMIN	ZMAX
DET1	1	SETU	0.000	0.000	209.450	0	MANY	188.950	229.950
DET2	1	SETU	0.000	0.000	52.100	0	MANY	26.000	78.200
V1TP	1	SETU	0.000	0.000	113.000	0	ONLY	231.964	254.900
V2TP	1	SETU	0.000	0.000	295.500	0	ONLY	145.900	163.077
V3TP	1	SETU	0.000	0.000	-23.000	0	ONLY	95.964	118.900
V4TP	1	SETU	0.000	0.000	157.100	0	ONLY	7.500	24.677
V1SD	1	SETU	0.000	0.000	200.232	0	ONLY	168.500	231.964
V2SD	1	SETU	0.000	0.000	177.039	0	ONLY	163.077	191.001
V3SD	1	SETU	0.000	0.000	64.232	0	ONLY	32.500	95.964
V4SD	1	SETU	0.000	0.000	38.639	0	ONLY	24.677	52.601
V1PR	1	SETU	0.000	0.000	162.000	0	ONLY	155.500	168.500
V2PR	1	SETU	0.000	0.000	197.500	0	ONLY	191.000	204.000
V3PR	1	SETU	0.000	0.000	26.000	0	ONLY	19.500	32.500
V4PR	1	SETU	0.000	0.000	59.100	0	ONLY	52.600	65.600
STTP	1	SETU	0.000	0.000	178.250	0	ONLY	150.000	206.500
STMD	1	SETU	0.000	0.000	125.000	0	ONLY	40.000	210.000
STBT	1	SETU	0.000	0.000	50.000	0	ONLY	0.000	100.000
STD2	1	SETU	0.000	0.000	34.075	0	ONLY	0.000	68.150

LEVEL3

VOLUME **DET1** CONTAINS **25** DAUGHTER VOLUMES POSITIONED IN THE DRS AS FOLLOWS:

NAME	COPY#	MOTHER	X0	Y0	Z0	IROT	KONLY	ZMIN	ZMAX
D1MD	1	DET1	0.000	0.000	10.300	0	MANY	4.700	15.900
D1MD	2	DET1	-42.300	0.000	10.300	5	MANY	4.700	15.900
D1MD	3	DET1	-26.000	39.100	10.300	0	MANY	4.700	15.900
D1MD	4	DET1	26.000	39.100	10.300	0	MANY	4.700	15.900
D1MD	5	DET1	42.300	0.000	10.300	5	MANY	4.700	15.900
D1MD	6	DET1	26.000	-39.100	10.300	0	MANY	4.700	15.900
D1MD	7	DET1	-26.000	-39.100	10.300	0	MANY	4.700	15.900
D1RS	1	DET1	0.000	62.250	12.600	0	ONLY	4.700	20.500
D1RS	2	DET1	16.250	62.500	12.600	0	ONLY	4.700	20.500
D1RS	3	DET1	-16.250	62.500	12.600	0	ONLY	4.700	20.500
D1RS	4	DET1	16.250	-62.500	12.600	0	ONLY	4.700	20.500
D1RS	5	DET1	-16.250	-62.500	12.600	0	ONLY	4.700	20.500
D1RS	6	DET1	61.000	-18.000	12.600	0	ONLY	4.700	20.500
D1RS	7	DET1	-61.000	18.000	12.600	0	ONLY	4.700	20.500
D1PT	1	DET1	0.000	0.000	0.750	0	MANY	-3.200	4.700
D1FE	1	DET1	0.000	-55.970	-8.000	0	ONLY	-20.400	4.400
D1FE	2	DET1	-51.870	28.500	-8.000	10	ONLY	-20.400	4.400
D1FE	3	DET1	3.020	58.100	-8.000	0	ONLY	-20.400	4.400
D1FE	4	DET1	0.000	50.100	-8.000	0	ONLY	-20.400	4.400
D1FE	5	DET1	51.870	28.500	-8.000	11	ONLY	-20.400	4.400
D1FE	6	DET1	51.870	-28.500	-8.000	10	ONLY	-20.400	4.400
D1FE	7	DET1	-51.870	-28.500	-8.000	11	ONLY	-20.400	4.400
D1HV	1	DET1	17.970	13.000	-0.725	0	ONLY	-5.850	4.400
D1HV	2	DET1	-21.850	-13.000	-0.725	0	ONLY	-5.850	4.400
D1HV	3	DET1	-21.750	13.970	-0.725	12	ONLY	-5.850	4.400

Table 7.4a. HIres Volume Positioning Table (continued).

D1HV	4	DET1	21.850	13.000	-0.725	0	ONLY	-5.850	4.400
D1HV	5	DET1	21.850	-13.000	-0.725	0	ONLY	-5.850	4.400
D1HV	6	DET1	17.970	-13.000	-0.725	0	ONLY	-5.850	4.400
D1HV	7	DET1	-17.970	-13.000	-0.725	0	ONLY	-5.850	4.400

VOLUME **DET2** CONTAINS **16** DAUGHTER VOLUMES POSITIONED IN THE DRS AS FOLLOWS:

NAME	COPY#	MOTHER	X0	Y0	Z0	IROT	KONLY	ZMIN	ZMAX
D2PT	1	DET2	0.000	0.000	21.062	0	ONLY	16.062	26.062
D2RG	1	DET2	0.000	0.000	21.062	0	ONLY	16.062	26.062
D2MD	1	DET2	30.200	-41.254	-4.688	13	ONLY	-25.438	16.062
D2MD	2	DET2	0.000	-41.254	-4.688	13	ONLY	-25.438	16.062
D2MD	3	DET2	-30.200	-41.254	-4.688	13	ONLY	-25.438	16.062
D2MD	4	DET2	45.300	-15.100	-4.688	14	ONLY	-25.438	16.062
D2MD	5	DET2	15.100	-15.100	-4.688	14	ONLY	-25.438	16.062
D2MD	6	DET2	-15.100	-15.100	-4.688	14	ONLY	-25.438	16.062
D2MD	7	DET2	-45.300	-15.100	-4.688	14	ONLY	-25.438	16.062
D2MD	8	DET2	45.300	15.100	-4.688	14	ONLY	-25.438	16.062
D2MD	9	DET2	15.100	15.100	-4.688	14	ONLY	-25.438	16.062
D2MD	10	DET2	-15.100	15.100	-4.688	14	ONLY	-25.438	16.062
D2MD	11	DET2	-45.300	15.100	-4.688	14	ONLY	-25.438	16.062
D2MD	12	DET2	30.200	41.254	-4.688	13	ONLY	-25.438	16.062
D2MD	13	DET2	0.000	41.254	-4.688	13	ONLY	-25.438	16.062
D2MD	14	DET2	-30.200	41.254	-4.688	13	ONLY	-25.438	16.062

LEVEL4

VOLUME **D1MD** CONTAINS **14** DAUGHTER VOLUMES POSITIONED IN THE DRS AS FOLLOWS:

NAME	COPY#	MOTHER	X0	Y0	Z0	IROT	KONLY	ZMIN	ZMAX
D1SN	1	D1MD	0.000	0.000	0.000	0	MANY	-4.250	4.250
D1PM	1	D1MD	13.389	13.389	0.000	1	ONLY	-5.465	5.465
D1PM	2	D1MD	18.935	0.000	0.000	2	ONLY	-5.465	5.465
D1PM	3	D1MD	13.389	-13.389	0.000	3	ONLY	-5.465	5.465
D1PM	4	D1MD	0.000	-18.935	0.000	6	ONLY	-5.465	5.465
D1PM	5	D1MD	-13.389	-13.389	0.000	7	ONLY	-5.465	5.465
D1PM	6	D1MD	-18.935	0.000	0.000	8	ONLY	-5.465	5.465
D1PM	7	D1MD	-13.389	13.389	0.000	9	ONLY	-5.465	5.465
D1PM	8	D1MD	0.000	18.935	0.000	4	ONLY	-5.465	5.465
D1TP	1	D1MD	0.000	0.000	4.925	0	ONLY	4.250	5.600
D1BT	1	D1MD	0.000	0.000	-4.925	0	ONLY	-5.600	-4.250
D1TR	1	D1MD	0.000	0.000	4.925	0	ONLY	4.250	5.600
D1BR	1	D1MD	0.000	0.000	-4.925	0	ONLY	-5.600	-4.250
D1SD	1	D1MD	0.000	0.000	0.000	0	MANY	-4.250	4.250

VOLUME **D1PT** CONTAINS **15** DAUGHTER VOLUMES POSITIONED IN THE DRS AS FOLLOWS:

NAME	COPY#	MOTHER	X0	Y0	Z0	IROT	KONLY	ZMIN	ZMAX
D1PH	1	D1PT	0.000	0.000	-0.150	0	MANY	-20.150	19.850
D1PH	2	D1PT	-42.300	0.000	-0.150	0	MANY	-20.150	19.850
D1PH	3	D1PT	-26.000	39.100	-0.150	0	MANY	-20.150	19.850
D1PH	4	D1PT	26.000	39.100	-0.150	0	MANY	-20.150	19.850
D1PH	5	D1PT	42.300	0.000	-0.150	0	MANY	-20.150	19.850

Table 7.4a. HIres Volume Positioning Table (continued).

D1PH	6	D1PT	26.000	-39.100	-0.150	0	MANY	-20.150	19.850
D1PH	7	D1PT	-26.000	-39.100	-0.150	0	MANY	-20.150	19.850
D1P1	1	D1PT	0.000	0.000	3.800	0	ONLY	3.650	3.950
D1JB	1	D1PT	3.750	38.250	-0.387	10	ONLY	-2.950	2.175
D1JB	2	D1PT	-41.000	-26.250	-0.387	0	ONLY	-2.950	2.175
D1JB	3	D1PT	-41.000	26.250	-0.387	0	ONLY	-2.950	2.175
D1JB	4	D1PT	41.000	26.250	-0.387	0	ONLY	-2.950	2.175
D1JB	5	D1PT	41.000	-26.250	-0.387	0	ONLY	-2.950	2.175
D1JB	6	D1PT	5.750	-41.250	-0.387	11	ONLY	-2.950	2.175
D1JB	7	D1PT	-5.750	-41.250	-0.387	10	ONLY	-2.950	2.175

VOLUME **D2MD** CONTAINS **12** DAUGHTER VOLUMES POSITIONED IN THE DRS AS FOLLOWS:

NAME	COPY#	MOTHER	X0	Y0	Z0	IROT	KONLY	ZMIN	ZMAX
D2SN	1	D2MD	0.000	0.000	14.337	0	ONLY	10.575	18.100
D2TP	1	D2MD	0.000	0.000	19.425	0	ONLY	18.100	20.750
D2SD	1	D2MD	0.000	0.000	15.663	0	ONLY	10.575	20.750
D2BT	1	D2MD	0.000	0.000	10.075	0	ONLY	9.575	10.575
D2EB	1	D2MD	0.000	0.000	-15.650	0	ONLY	-20.750	-10.550
D2PM	1	D2MD	0.000	0.000	-0.488	0	ONLY	-10.550	9.575
D2PM	2	D2MD	8.475	4.900	-0.488	0	ONLY	-10.550	9.575
D2PM	3	D2MD	8.475	-4.900	-0.488	0	ONLY	-10.550	9.575
D2PM	4	D2MD	0.000	-9.800	-0.488	0	ONLY	-10.550	9.575
D2PM	5	D2MD	-8.475	-4.900	-0.488	0	ONLY	-10.550	9.575
D2PM	6	D2MD	-8.475	4.900	-0.488	0	ONLY	-10.550	9.575
D2PM	7	D2MD	0.000	9.800	-0.488	0	ONLY	-10.550	9.575

LEVEL5

VOLUME **D1PM** CONTAINS **1** DAUGHTER VOLUMES POSITIONED IN THE DRS AS FOLLOWS:

NAME	COPY#	MOTHER	X0	Y0	Z0	IROT	KONLY	ZMIN	ZMAX
D1PQ	1	D1PM	0.000	0.000	-5.215	0	ONLY	-5.465	-4.965

VOLUME **D1P1** CONTAINS **7** DAUGHTER VOLUMES POSITIONED IN THE DRS AS FOLLOWS:

NAME	COPY#	MOTHER	X0	Y0	Z0	IROT	KONLY	ZMIN	ZMAX
D1H1	1	D1P1	0.000	0.000	0.000	0	ONLY	-0.150	0.150
D1H1	2	D1P1	-42.300	0.000	0.000	0	ONLY	-0.150	0.150
D1H1	3	D1P1	-26.000	39.100	0.000	0	ONLY	-0.150	0.150
D1H1	4	D1P1	26.000	39.100	0.000	0	ONLY	-0.150	0.150
D1H1	5	D1P1	42.300	0.000	0.000	0	ONLY	-0.150	0.150
D1H1	6	D1P1	26.000	-39.100	0.000	0	ONLY	-0.150	0.150
D1H1	7	D1P1	-26.000	-39.100	0.000	0	ONLY	-0.150	0.150

VOLUME **D2BT** CONTAINS **7** DAUGHTER VOLUMES POSITIONED IN THE DRS AS FOLLOWS:

NAME	COPY#	MOTHER	X0	Y0	Z0	IROT	KONLY	ZMIN	ZMAX
D2PQ	1	D2BT	0.000	0.000	0.000	0	ONLY	-0.500	0.500
D2PQ	2	D2BT	8.475	4.900	0.000	0	ONLY	-0.500	0.500
D2PQ	3	D2BT	8.475	-4.900	0.000	0	ONLY	-0.500	0.500
D2PQ	4	D2BT	0.000	-9.800	0.000	0	ONLY	-0.500	0.500

Table 7.4a. HIres Volume Positioning Table (continued).

D2PQ	5	D2BT	-8.475	-4.900	0.000	0	ONLY	-0.500	0.500
D2PQ	6	D2BT	-8.475	4.900	0.000	0	ONLY	-0.500	0.500
D2PQ	7	D2BT	0.000	9.800	0.000	0	ONLY	-0.500	0.500

Table 7.4b. LOres Volume Positioning Table.

LEVEL2

VOLUME **SETU** CONTAINS **15** DAUGHTER VOLUMES POSITIONED IN THE DRS AS FOLLOWS:

NAME	COPY#	MOTHER	X0	Y0	Z0	IROT	KONLY	ZMIN	ZMAX
DET1	1	SETU	0.000	0.000	218.100	0	ONLY	206.100	230.100
DET2	1	SETU	0.000	0.000	52.100	0	ONLY	26.000	78.200
D2RG	1	SETU	0.000	0.000	73.163	0	ONLY	68.163	78.163
V1TP	1	SETU	0.000	0.000	233.766	0	ONLY	232.900	234.632
V2TP	1	SETU	0.000	0.000	161.570	0	ONLY	160.740	162.400
V3TP	1	SETU	0.000	0.000	97.730	0	ONLY	96.900	98.560
V4TP	1	SETU	0.000	0.000	23.100	0	ONLY	22.300	23.900
V1SD	1	SETU	0.000	0.000	200.650	0	ONLY	168.400	232.900
V2SD	1	SETU	0.000	0.000	176.650	0	ONLY	162.400	190.900
V3SD	1	SETU	0.000	0.000	64.650	0	ONLY	32.400	96.900
V4SD	1	SETU	0.000	0.000	38.150	0	ONLY	23.900	52.400
STTP	1	SETU	0.000	0.000	178.250	0	ONLY	150.000	206.500
STMD	1	SETU	0.000	0.000	125.000	0	ONLY	40.000	210.000
STBT	1	SETU	0.000	0.000	50.000	0	ONLY	0.000	100.000
STD2	1	SETU	0.000	0.000	34.075	0	ONLY	0.000	68.150

LEVEL3

VOLUME **DET1** CONTAINS **15** DAUGHTER VOLUMES POSITIONED IN THE DRS AS FOLLOWS:

NAME	COPY#	MOTHER	X0	Y0	Z0	IROT	KONLY	ZMIN	ZMAX
D1MD	1	DET1	0.000	0.000	1.650	0	MANY	-3.950	7.250
D1MD	2	DET1	-42.300	0.000	1.650	5	MANY	-3.950	7.250
D1MD	3	DET1	-26.000	39.100	1.650	0	MANY	-3.950	7.250
D1MD	4	DET1	26.000	39.100	1.650	0	MANY	-3.950	7.250
D1MD	5	DET1	42.300	0.000	1.650	5	MANY	-3.950	7.250
D1MD	6	DET1	26.000	-39.100	1.650	0	MANY	-3.950	7.250
D1MD	7	DET1	-26.000	-39.100	1.650	0	MANY	-3.950	7.250
D1RS	1	DET1	0.000	62.250	3.950	0	ONLY	-3.950	11.850
D1RS	2	DET1	16.250	62.500	3.950	0	ONLY	-3.950	11.850
D1RS	3	DET1	-16.250	62.500	3.950	0	ONLY	-3.950	11.850
D1RS	4	DET1	16.250	-62.500	3.950	0	ONLY	-3.950	11.850
D1RS	5	DET1	-16.250	-62.500	3.950	0	ONLY	-3.950	11.850
D1RS	6	DET1	61.000	-18.000	3.950	0	ONLY	-3.950	11.850
D1RS	7	DET1	-61.000	18.000	3.950	0	ONLY	-3.950	11.850
D1PT	1	DET1	0.000	0.000	-7.900	0	ONLY	-11.850	-3.950

Table 7.4b. LOres Volume Positioning Table (continued).

VOLUME **DET2** CONTAINS **14** DAUGHTER VOLUMES POSITIONED IN THE DRS AS FOLLOWS:

NAME	COPY#	MOTHER	X0	Y0	Z0	IROT	KONLY	ZMIN	ZMAX
D2PT	1	DET2	0.000	0.000	21.062	0	ONLY	16.062	26.062
D2MD	1	DET2	30.200	-41.254	-4.688	0	ONLY	-25.438	16.062
D2MD	2	DET2	0.000	-41.254	-4.688	0	ONLY	-25.438	16.062
D2MD	3	DET2	-30.200	-41.254	-4.688	0	ONLY	-25.438	16.062
D2MD	4	DET2	45.300	-15.100	-4.688	0	ONLY	-25.438	16.062
D2MD	5	DET2	15.100	-15.100	-4.688	0	ONLY	-25.438	16.062
D2MD	6	DET2	-15.100	-15.100	-4.688	0	ONLY	-25.438	16.062
D2MD	7	DET2	-45.300	-15.100	-4.688	0	ONLY	-25.438	16.062
D2MD	8	DET2	45.300	15.100	-4.688	0	ONLY	-25.438	16.062
D2MD	9	DET2	15.100	15.100	-4.688	0	ONLY	-25.438	16.062
D2MD	10	DET2	-15.100	15.100	-4.688	0	ONLY	-25.438	16.062
D2MD	11	DET2	-45.300	15.100	-4.688	0	ONLY	-25.438	16.062
D2MD	12	DET2	30.200	41.254	-4.688	0	ONLY	-25.438	16.062
D2MD	13	DET2	0.000	41.254	-4.688	0	ONLY	-25.438	16.062
D2MD	14	DET2	-30.200	41.254	-4.688	0	ONLY	-25.438	16.062

LEVEL4

VOLUME **D1MD** CONTAINS **14** DAUGHTER VOLUMES POSITIONED IN THE DRS AS FOLLOWS:

NAME	COPY#	MOTHER	X0	Y0	Z0	IROT	KONLY	ZMIN	ZMAX
D1SN	1	D1MD	0.000	0.000	0.000	0	ONLY	-4.250	4.250
D1PM	1	D1MD	14.648	14.648	0.000	1	ONLY	-5.215	5.215
D1PM	2	D1MD	20.715	0.000	0.000	2	ONLY	-5.215	5.215
D1PM	3	D1MD	14.648	-14.648	0.000	3	ONLY	-5.215	5.215
D1PM	4	D1MD	0.000	-20.715	0.000	6	ONLY	-5.215	5.215
D1PM	5	D1MD	-14.648	-14.648	0.000	7	ONLY	-5.215	5.215
D1PM	6	D1MD	-20.715	0.000	0.000	8	ONLY	-5.215	5.215
D1PM	7	D1MD	-14.648	14.648	0.000	9	ONLY	-5.215	5.215
D1PM	8	D1MD	0.000	20.715	0.000	4	ONLY	-5.215	5.215
D1TP	1	D1MD	0.000	0.000	4.925	0	ONLY	4.250	5.600
D1BT	1	D1MD	0.000	0.000	-4.925	0	ONLY	-5.600	-4.250
D1TR	1	D1MD	0.000	0.000	4.925	0	ONLY	4.250	5.600
D1BR	1	D1MD	0.000	0.000	-4.925	0	ONLY	-5.600	-4.250
D1SD	1	D1MD	0.000	0.000	0.000	0	ONLY	-4.250	4.250

VOLUME **D2MD** CONTAINS **4** DAUGHTER VOLUMES POSITIONED IN THE DRS AS FOLLOWS:

NAME	COPY#	MOTHER	X0	Y0	Z0	IROT	KONLY	ZMIN	ZMAX
D2SN	1	D2MD	0.000	0.000	14.337	0	ONLY	10.575	18.100
D2TP	1	D2MD	0.000	0.000	19.425	0	ONLY	18.100	20.750
D2SD	1	D2MD	0.000	0.000	15.663	0	ONLY	10.575	20.750
D2BT	1	D2MD	0.000	0.000	10.075	0	ONLY	9.575	10.575
D2PM	1	D2MD	0.000	0.000	-5.588	0	ONLY	-20.750	9.575

Table 7.4b. LOres Volume Positioning Table (continued).

VOLUME **D1PT** CONTAINS **7** DAUGHTER VOLUMES POSITIONED IN THE DRS AS FOLLOWS:

NAME	COPY#	MOTHER	X0	Y0	Z0	IROT	KONLY	ZMIN	ZMAX
D1PH	1	D1PT	0.000	0.000	0.000	0	ONLY	-20.000	20.000
D1PH	2	D1PT	-42.300	0.000	0.000	0	ONLY	-20.000	20.000
D1PH	3	D1PT	-26.000	39.100	0.000	0	ONLY	-20.000	20.000
D1PH	4	D1PT	26.000	39.100	0.000	0	ONLY	-20.000	20.000
D1PH	5	D1PT	42.300	0.000	0.000	0	ONLY	-20.000	20.000
D1PH	6	D1PT	26.000	-39.100	0.000	0	ONLY	-20.000	20.000
D1PH	7	D1PT	-26.000	-39.100	0.000	0	ONLY	-20.000	20.000